# Cisco NCS 4202 Hardware Installation Guide

**First Published:** 2016-08-05

**Last Modified:** 2026-04-14

**Americas Headquarters**
Cisco Systems, Inc.
170 West Tasman Drive
San Jose, CA 95134-1706
USA
http://www.cisco.com
Tel: 408 526-4000
800 553-NETS (6387)
Fax: 408 527-0883

© 2026 Cisco Systems, Inc. All rights reserved.

# CONTENTS


CHAPTER 1

**Cisco NCS 4202 Overview 1**

Cisco NCS 4202 Features 1

GigabitEthernet Copper Ports 1

GE SFP Ports 2

SFP+ Ports 2

External Interfaces 6

Network Interfaces 6

Network Timing Interfaces 6

External Alarm Inputs 7

Management Interfaces 7

Power Supply and Fans 8

LED Indicators 8

System–Interface LED Behavior 12

Online Insertion and Removal 12

CHAPTER 2

**Preparing for Installation 15**

Safety Guidelines 15

Standard Warning Statements 15

Safety Guidelines for Personal Safety and Equipment Protection 16

Safety Precautions for Module Installation and Removal 16

Safety with Electricity 16

Power Supply Considerations 17

Preventing ESD Damage 17

Site Planning 18

General Precautions 18

Site Planning Checklist 18

Site Selection Guidelines 18
Environmental Requirements 19
Physical Characteristics 19
Air Flow Guidelines 19
Floor Loading Considerations 22
Site Power Guidelines 22
Electrical Circuit Requirements 22
Site Cabling Guidelines 23
Asynchronous Terminal Connections 23
Interference Considerations 23
Rack-Mounting Guidelines 24
Precautions for Rack-Mounting 24
Rack Selection Guidelines 24
Equipment Rack Guidelines 25
Installation Checklist 26
Creating a Site Log 27
Chassis-Lifting Guidelines 27
Tools and Equipment 27
Unpacking and Verifying the Shipped Contents 28

CHAPTER 3 **Installing the Cisco NCS 4202 Series Chassis** 31
Prerequisites 31
Installing the Chassis in a Rack 31
Installing the Chassis Brackets 32
Mounting the Chassis in a Rack 33
Installing the Chassis in the Rack 34
Attaching the Cable Guides 35
Installing and Removing the Front Door 37
Installing the Front Door 37
Removing the Front Door 37
Wall Mounting the Router 38
Attaching the Brackets to the Router for Wall-Mounting 38
Mounting the Router on the Wall 39
Installing and Removing SFP Modules 41

Installing SFP Modules 42
Removing SFP Modules 43
Connecting to the Copper Ports 44
Connecting to SFP Modules 45
Connecting to Fiber-Optic SFP Modules 45
Installing the Chassis Ground Connection 46
Installing and Removing the Fan Tray 48
Installing the Fan Tray 49
Removing the Fan Tray 50
Interface Module Installation 51
Installing an Interface Module 52
Removing an Interface Module 52
Installing Patch Panel 52
Install 3G Patch Panel 61
Install Rack Brackets 61
Set up 3G Patch Panel on Rack 69
Wall Mount 3G Patch Panel 81
Patch Panel Dimensions 83
Patch Panel Pinout 87
Panel and Bracket 88
Installing the Power Supply 88
Power Connection Guidelines 89
Guidelines for DC-Powered Systems 89
Guidelines for AC-Powered Systems 90
Preventing Power Loss 90
Installing the DC Power Supply Module 90
Activating a DC Power Supply Module 91
Installing the DC Power Cables 92
Removing the DC Power Supply Module 93
Installing the AC Power Supply Module 94
Installing the AC Power Cables 96
Activating an AC Power Supply Module 96
Removing the AC Power Supply Module 97
Powering On the Chassis 98

Connecting the Chassis to the Network 98
Connecting Console Cables 99
Connecting to the USB Serial Port Using Microsoft Windows 99
Connecting to the Console Port Using Mac OS X 99
Connecting to the Console Port Using Linux 100
Installing the Cisco USB Device Driver 100
Uninstalling the Cisco USB Driver 102
Connecting to the EIA Console Port 103
Connecting a Management Ethernet Cable 104
Installing and Removing SFP and SFP+ Modules 104
Connecting a USB Flash Device 105
Removing a USB Flash Device 105
Connecting Timing Cables 106
Connecting Cables to a GPS Interface 106
Connecting Ethernet Cables 107
Connecting Cables to SFP Modules 107
Connector and Cable Specifications 108

CHAPTER 4
**Initial Configuration** 109
Checking Conditions Prior to System Startup 109
Powering Up the Chassis 109
Verifying the Front Panel LEDs 110
Verifying the Hardware Configuration 110
Checking Hardware and Software Compatibility 110
Configuring the Chassis at Startup 111
Accessing the CLI Using the Console 111
Configuring Global Parameters 112
Checking the Running Configuration Settings 112
Saving the Running Configuration to NVRAM 113
Safely Powering Off the chassis 113

CHAPTER 5
**Troubleshooting** 115
Pinouts 115
GPS Port Pinouts 115

Time-of-Day Port Pinouts 115
Alarm Port Pinouts 116
Management GigabitEthernet Port Pinouts 116
USB Console Port Pinouts 117
USB Flash or MEM Port Pinouts 117
Optical Fiber Specifications 118
Alarm Conditions 118
LED Summary 118
Power Supply LEDs 118
Fan Tray LEDs 119

APPENDIX A Site Log 121

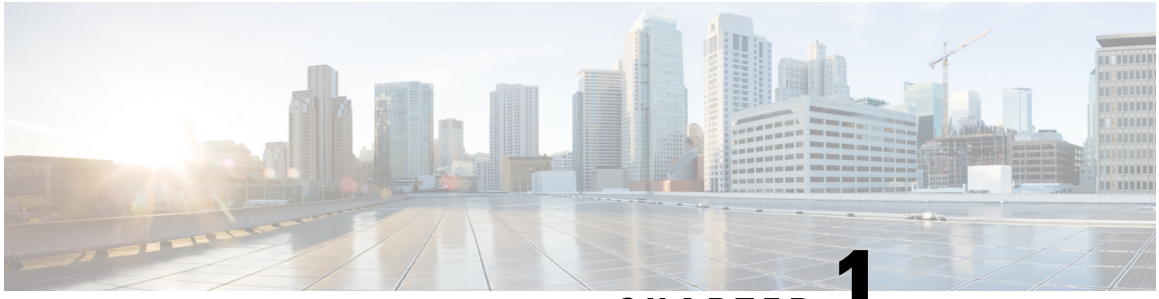

CHAPTER 1

# Cisco NCS 4202 Overview

The Cisco NCS 4202 Network Convergence Systems are full-featured, compact one-RU high converged access platforms designed for the cost-effective delivery of TDM to IP or MPLS migration services. These temperature-hardened, high-throughput, small-form-factor, low-power-consumption systems are optimized for circuit emulation (CEM) and business applications. NCS 4202 chassis allow service providers to deliver dense scale in a compact form factor and unmatched CEM and Carrier Ethernet (CE) capabilities. They also provide a comprehensive and scalable feature set, supporting both Layer 2 VPN (L2VPN) and Layer 3 VPN (L3VPN) services in a compact package..


- Cisco NCS 4202 Features, on page 1


# Cisco NCS 4202 Features

The Cisco NCS 4202 provides 1GE/10GE, MPLS, H-QoS, high availability hardware design, advanced Ethernet Operations, Administration, and Maintenance (OAM), as well as advanced timing support, including satellite timing (GNSS) based clocking, and PoE in one platform.

This chassis has fixed Ethernet interfaces (8x1G copper + 4x1G SFP + 4x10G/1G (dual rate)

The following table provides snapshot of the number and type of supported ports:

| NCS 4200 Series Sub-family | Dual Rate 1G/10G Port | 1 GE Port |
|---|---|---|
| Cisco NCS 4202 | 4[1]<br>Te0/0/12 – Te 0/0/15 | 8 Cu ports Ge0/0/0 – Ge0/0/7<br>4 SFP ports Ge0/0/8 – Ge0/0/11 |

[1] Each port can operate at either 1G or 10G, and operates in a mutually exclusive way. You cannot insert both 1G and 10G together.

### Limitation

In the Cisco NCS 4202 router, PAUSE frames propagate over the 1G interfaces, while the 10G ports drop them as expected.

# GigabitEthernet Copper Ports

Fixed copper GigabitEthernet (GE) interfaces are provided through standard RJ-45 connectors. These ports support the following features:

- Standard 10/100/1000Base-T/TX operation with forced or auto-negotiation for speed and duplex.
- Automatic crossover (auto-MDIX) for straight-through and crossover connections.
- Pause flow control as defined by the 802.3x standard.
- Maximum frame size of 9216 bytes.
- Synchronous ENET operation that provides its recovered receive clock as an input clock source for the SETS as well as uses the system-wide reference clock to derive its transmit clock.

# GE SFP Ports

The GE SFP ports support the following features:

- 100Base-FX and 1000Base-X SFP modules.
- Digital optical monitoring as specified by the SFP.
- Any mix of SFPs is supported unless specifically noted.
- Pause flow control as defined by the 802.3x standard.
- Maximum frame size of 9216 bytes.
- Synchronous ENET operation that provides its recovered receive clock as an input clock source for the SETS as well as uses the system-wide reference clock to derive its transmit clock.

**Note** Copper based SFPs do not support synchronous ENET operations.

# SFP+ Ports

The SFP+ ports support the following features:

- Digital optical monitoring as specified by the optical transceiver module.
- Any mix of SFPs is supported unless specifically noted.
- Pause flow control as defined by the 802.3x standard.
- Maximum frame size of 9216 bytes.

The following figure shows the 3D image of the Cisco NCS 4202:

*Figure 1: Figure 3D Image of the Cisco NCS 4202*

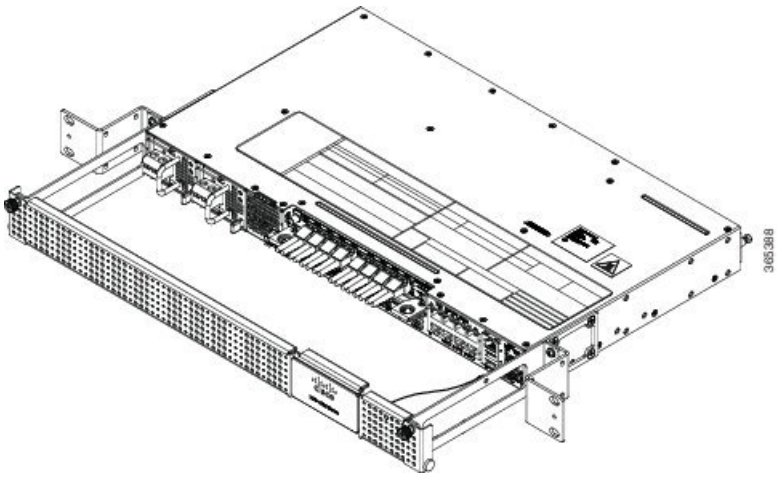


The following figures show the port numbering for the Cisco NCS 4202:

*Figure 2: Front Panel of Cisco NCS 4202 —With DC Power Supply*

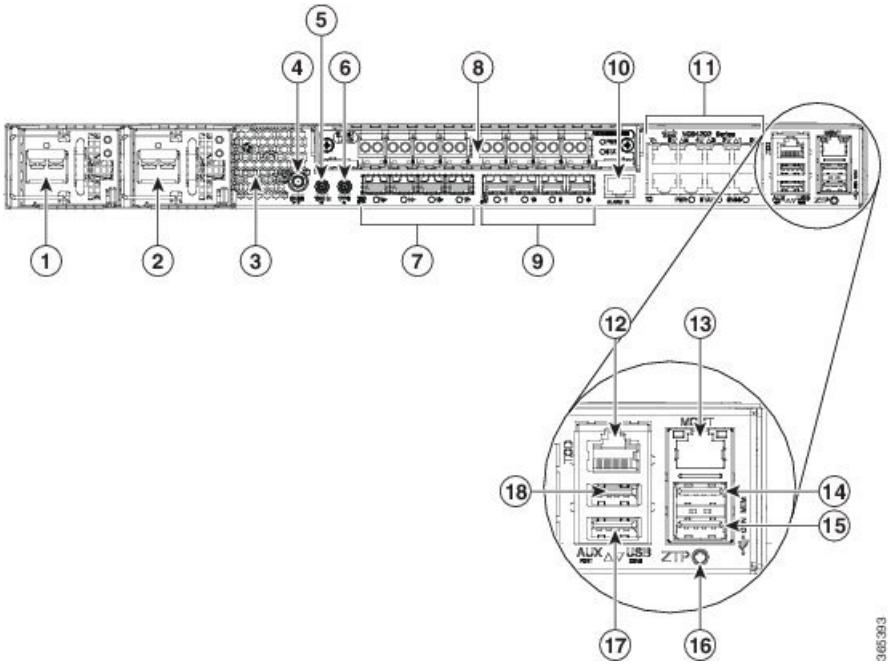


| | | | |
|---|---|---|---|
| 1 | Power Supply 0 (AC or DC) | 10 | Alarm port |
| 2 | Power Supply 1 (AC or DC) | 11 | Eight Copper port (1G PoE) |
| 3 | Front Air-Inlet Area | 12 | ToD port |
| 4 | GNSS RF IN (SMA threaded connector) | 13 | Management Port |

| | | | |
|---|---|---|---|
| 5 | SMB Snap-in connector (10MHZ) | 14 | USB Memory port |
| 6 | SMB Snap-in connector (1PPS) | 15 | USB Console port |
| 7 | Four 1G/10G SFP+ | 16 | Zero Touch Provisioning button |
| 8 | Interface Module Slot | 17 | RS232 Console port |
| 9 | Four 1G SFP | 18 | RS232 Aux Console port |

***Figure 3: Rear View of the Cisco NCS 4202***

| | | | |
|---|---|---|---|
| 1 | Fan tray | 3 | Air vents |
| 2 | Grounding lug | — | |

Table below describes the other features of Cisco NCS 4202 (AC and DC).

***Table 1: Cisco NCS 4202 Specifications***

| **Specification** | **NCS 4202** |
|---|---|
| DimensionWidth x Depth x Height | 23.06 x 16.43 x 1.73 inches |
| Weight | Total weight: 5.63 kg<br>Weight of PSU: 0.59 kg<br>Weight of Fan: 0.33 kg |
| Rack Unit | EIA one RU |
| Airflow | Front to back |
| Cable access | Front cable access |
| System throughput | 60 Gbps, 95 Mpps |
| Power Supply | |
| Redundant | Yes |
| AC | Yes |
| Voltage Range | 85V AC to 264V AC, nominal 100/240 VAC |

| Specification | NCS 4202 |
|---|---|
| Frequency Range | 47 Hz to 63 Hz, nominal 50/60 Hz |
| Maximum Power | 360 W |
| DC | Yes |
| Voltage Range | -18 VDC to -32 VDC or -40 VDC to -72 VDC |
| Nominal Voltage Range | -24 VDC/-48 VDC/-60 VDC |
| Maximum Power | 375 W |
| Heat Dissipation | — |
| Operating Temperature/Humidity | –40º C to 70º C |
| Alarms | • 4 alarm dry contact inputs (normally open)<br>• LED indicators for critical, major, and minor alarms |
| Supported Interface Modules | • 8 port RJ48C T1/E1 Interface Module |
| Mounting option | Front Z-bracket mount for 23 inches rack |
| Port Configuration | 12x1G and 4x10G/1G ports |
| Port Numbering | 4x10G SFP+ – Port [12:15]<br>**Note**<br>Ports 12 to 15 are Dual Rate ports<br>4x1G SFP – Port [8:11]<br>8x1G PoE RJ45/Cu ports [0:7] |
| Copper/1G/10G Port LEDs | Link/Activity/Fault |
| Temperature Sensors | Four temperature sensors |
| 1PPS/ToD | External ports for 1PPS/TOD |
| PoE | Provides power over Ethernet |
| GNSS | Connects to the external GPS |

*Figure 4: Cisco NCS 4202-Dimensions*

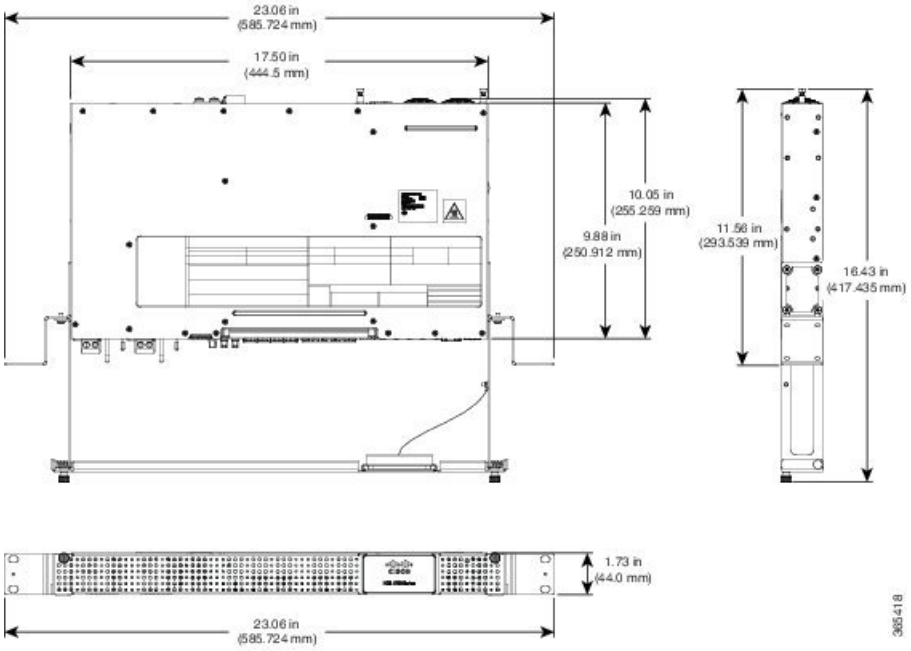


# External Interfaces

The external physical interfaces on the front panel of the chassis are given below:

## Network Interfaces

The network interfaces are provided through fixed ports.

- GE SFP ports—supports 100/1000 modes
- GE Copper RJ-45 ports—supports 10/100/1000 operation. All eight copper RJ-45 ports support PoE/PoE+/UPoE with overall power budget of 180 W.

**Note** PoE is not supported when the system is powered with 24 V DC.

- 10GE SFP+—supports 10G/1G mode depending on the SFP+/SFP in the network interface slot.

At 1G mode, it supports only 1000BaseX.

## Network Timing Interfaces

- 10MHz input or output—Miniature coaxial connectors for 10MHz timing (input or output). You can use this interfaces with an external GPS device to send or receive clocking from the chassis
- 1PPS input or output and ToD input or output—This interface is used for input or output of time-of-day (ToD) and 1PPS pulses. ToD format includes both NTP and IEEE 1588-2008 time formats.

The same RS422 pins for 1PPS and TOD are shared between input and output directions. The direction for each can be independently configured through software.

- GNSS RF IN—This interface is used to connect the external GPS antenna to the in-built GPS module.

## External Alarm Inputs

The chassis supports four dry contact alarm inputs through an RJ-45 jack on the front panel.

Each alarm input can be provisioned as critical, major, minor, or can be configured for normally open or normally closed.

## Management Interfaces

The following management interfaces are supported:

### Management ENET Port

A single management copper ENET port supporting 100/1000Base-T operation is provided on the front panel. It uses a standard RJ-45 jack.

### RS232 Console Port

The RS232 console port provides transmission (Tx), reception (Rx), and ground (Gnd).

**Note** The RS232 console port is enabled only through the Cisco-designed cable adapter USB type A cable to RJ-45 adapter cable. To use this port, disable the flow control on the terminal.

**Caution** Do not plug the USB-to-RJ45 adapter cable in the USB Memory port.

### USB Console

A single USB 2.0 Type-A receptacle on the front panel of the chassis provides console access to ROMMON, Cisco IOS-XE and diagnostics. While it uses the Type-A connector, it operates as a USB peripheral only for connection to an external host computer. This interface requires the use of a Type-A to Type-A connector instead of a standard USB cable.

**Note** Use of the USB console is mutually exclusive of the RS232 console port. This interface requires the use of a Type-A to Type-A USB cable.

### USB Mass Storage

A single USB 2.0 Type-A receptacle on the front panel of the chassis allows external USB mass storage devices, such as standard USB flash drives. This interface is used to load images, load or store configurations, write logs, and so on.

**Note** More than 8 GB is not supported in ROMMON mode,

### Zero Touch Provisioning Button

The Zero Touch Provisioning (ZTP) button on the front panel initiates the ZTP process on a short press of less than eight seconds. Pressing the ZTP button for more than eight seconds causes a board reset.

### RS232 Auxiliary Console Port

The RS232 Aux console port provides transmission (Tx), reception (Rx), and ground (Gnd).

**Note** The RS232 Aux console port is enabled only through the Cisco-designed cable adapter from USB type A cable to RJ-45 adapter cable.

This is a debug-only port. it is recommended that this port be used by field service engineers only.

## Power Supply and Fans

The chassis supports AC, DC, or a combination of both power supplies in a 1+1 redundant configuration.

*Table 2: Power Supply Specification*

| Specification | AC (A920-PWR400-A) | DC (A920-PWR400-D) |
|---|---|---|
| Voltage | 100 V – 240 V | 24 V – 60 V |
| Current | 5A through a standard C16 type receptacle | 20A through a two-position terminal block |
| Input Power | 360 W | 375 W |

**Note** This product requires surge protection as part of the building installation. To comply with the Telcordia GR-1089 NEBS standard for electromagnetic compatibility and safety, an external surge protective device (SPD) is required at the AC power service equipment.

**Note** For DC systems, if a surge of more than 500 V is expected, add an appropriate external surge protective device.

The chassis has a single fan-tray with four fans. The system is designed to operate at its maximum operating temperature of 70º C, in case of failure of a single fan operating temperature of 65º C. The fan tray is field-replaceable.

## LED Indicators

This section describes the different types of LEDs and their behavior.

### PWR and STAT LEDs

The PWR LEDs are available on the front panel. These LEDs provide power on the board (PWR) status. During power up state, these LEDs provide booting status and report errors.

**Note** The digital code signing functionality validates the integrity and authenticity of the ROMMON image before booting it.

*Table 3: PWR and STAT LED Indications*

| PWR LED State | STAT LED state | Indication | Comment |
|---|---|---|---|
| Amber | Off | Power in the system is all right and FPGA configuration is taking place. | Permanent Amber/Off indicates FPGA configuration failure. |
| Amber | Red | FPGA Image Validation Error. | System is in unresponsive state. |
| Flashing Amber and Green alternatively | Amber | Upgrade FPGA image error, continuing with Golden FPGA image. | — |
| Flashing Amber and Green alternatively | Off | FPGA configuration successful and Digital code signing successfully validated FPGA image. Digital code signing passed the control to Microloader to boot ROMMON. | — |
| Flashing Amber and Green alternatively | Red | Digital code signing reported failure in ROMMON image validation. | — |
| Flashing Amber | Flashing Amber | ZTP process has begun.<br>**Note**<br>A short press of the ZTP button triggers the provisioning. A longer press of more than eight seconds, resets the board. | Both LEDs turn Green once provisioning is complete. |
| Green | Off | IOS-XE image is booting. | |
| Green | Green | Successfully booted and system is operating normally. | — |
| Green | Amber | A minor alarm or synchronization is in Holdover or free-running mode | — |
| Green | Red | A major or critical alarm (high temperature reported for any sensor) or multiple fan failure. | — |

## CPU Management Port LEDs

The LED for the 100/1000 Management port is integrated on the connector itself. There are two LEDs in the connector to indicate the Link or Activity status.

*Table 4: CPU Management Port LED Indication*

| LED | LED State | Indication |
|---|---|---|
| Left | Green | Link up in 1000 Mbps |
| | Blinking Green | Activity in 1000 Mbps |
| | Amber | Link up in 100 Mbps |
| | Blinking Amber | Activity in 100 Mbps |
| | Off | Link down |
| Right | Green | Link up in full duplex with 1000 Mbps speed |
| | Green | Link up in full duplex with 100 Mbps speed |
| | Off | Link up in half duplex with 100 Mbps speed |

## SFP LEDs

Each SFP port has an LED indicator.

*Table 5: SFP Port LED Indication*

| LED | LED State | Indication |
|---|---|---|
| Labeled same as the SFP port number | Green | Link up in 1000Base-X/100Base-FX |
| | Blinking Green | Activity in 1000 Base-X/100Base-FX |
| | Amber | Fault/Error/Link down |
| | Off | Administratively down |

## SFP+ LEDs

Each SFP+ port has an LED indicator.

*Table 6: SFP+ Port LED Indication*

| LED | LED State | Indication |
|---|---|---|
| Labeled same as the SFP port number | Green | Link up in 10G/1G |
| | Blinking Green | Activity in 10G/1G |
| | Amber | Fault/Error/Link down |
| | Off | Administratively down |

## RJ-45 LEDs

There is only one LED on each RJ45 port on the fixed slot (slot 0/0) and this indicates only the link or speed status. There is no LED to show the Duplex state. However, there are two LEDs for IM RJ45 ports and they indicate the Link and Duplex state.

*Table 7: RJ-45 LED Indication*

| LED State | Indication |
|---|---|
| Green | Link up in 10/100/1000Base-T |
| Blinking Green | Activity in 10/100/1000Base-T |
| Amber | Fault/Error/Link down |
| Off | Administratively down |

## Power Supply Unit LEDs

Each power supply unit has a corresponding LED on the front panel.

*Table 8: PSU LED Indication*

| Power LED | FAIL LED | Power Supply Condition |
|---|---|---|
| Green | Off | Power Supply ON; valid input/output |
| Yellow 1Hz blinking | Red 1Hz blinking | PSU Warning due to OCP, OTP, UV, OV, OP, abnormal fan operation<br>PSU continues to operate |
| Off | On | PSU failure due to OCP, OTP, UV, OV, OP, abnormal fan operation. No valid output. |
| Green 1Hz blinking | Off | Valid power present, shutdown by system. |
| Yellow | Off | Input voltage low |
| Off | Off | No valid power input. |

## System–Interface LED Behavior

*Table 9: 1G Copper and 1G SFP LED Indication*

| Event | 1G Copper Port LEDs (Link) | 1G SFP Port LEDs |
|---|---|---|
| ROMMON | Off | Off |
| IOS Shut | Off | Off |
| IOS No shut (cable disconnect) | Amber | Amber |
| IOS No shut (Link Up) | Green | Green |

*Table 10: Dual Rate Port LED Indication*

| Event | Dual Rate (1G/10G) Port LEDs |
|---|---|
| ROMMON | Off |
| IOS Shut | Off |
| IOS No shut (cable disconnect) | Amber |
| IOS No shut (Link Up) | Green |

*Table 11: Management Port LED Indication*

| Event | Management Port LEDs (Link/Duplex) |
|---|---|
| ROMMON | Green/Off |
| IOS Shut | Off/Off |
| IOS No shut (cable disconnect) | Amber/Off |
| IOS No shut (cable connect) | Green/Green in 1G mode<br>Amber/Green in 100M mode |

# Online Insertion and Removal

This chassis supports the following OIR operations:

- When an SFP is removed, there is no effect on traffic flowing on other ports.
- When an SFP is installed, the system initializes that port for operation based upon the current configuration. If the inserted SFP is incompatible with the current configuration for that port, the port does not become operational until the configuration is updated.
- Both power supplies are installed and active and the load may be shared between them or a single PSU could support the whole load. When a power supply is not working or the input cable is removed, the remaining power supply takes the entire load without disruption.

**Caution** Do not remove or replace the fan tray with the chassis powered on.

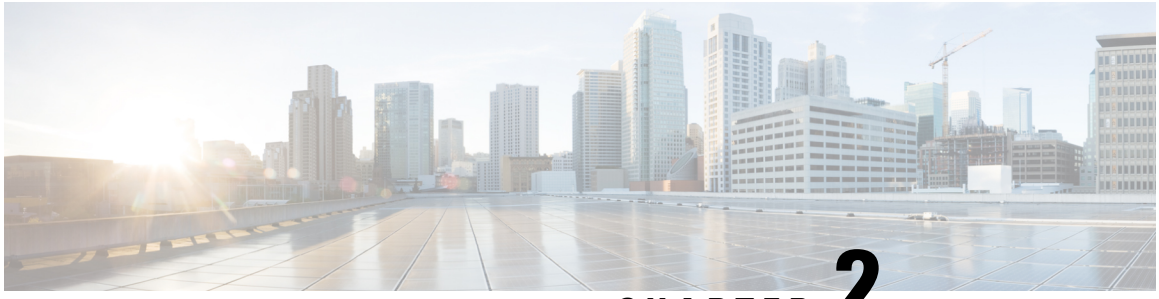

CHAPTER 2

# Preparing for Installation

This chapter describe how to prepare for the installation of the chassis at your site, and contains the following sections:


- Safety Guidelines, on page 15
- Site Planning, on page 18


# Safety Guidelines

Before you begin the installation, review the safety guidelines in this chapter to avoid injuring yourself or damaging the equipment.

In addition, before replacing, configuring, or maintaining the chassis, review the safety warnings listed in the *Regulatory Compliance and Safety Information* document.

The following sections describe the safety guidelines:

## Standard Warning Statements

**Warning** Before working on a system that has an on/off switch, turn OFF the power and unplug the power cord. Statement 1

**Warning** This unit might have more than one power supply connection. All connections must be removed to de-energize the unit. Statement 1028

**Warning** This equipment must be grounded. Never defeat the ground conductor or operate the equipment in the absence of a suitably installed ground conductor. Contact the appropriate electrical inspection authority or an electrician if you are uncertain that suitable grounding is available. Statement 1024

**Warning** Before working on equipment that is connected to power lines, remove jewelry (including rings, necklaces, and watches). Metal objects will heat up when connected to power and ground and can cause serious burns or weld the metal object to the terminals. Statement 43

For other standard warning messages and their translations, see the Regulatory Compliance and Safety Information for the Cisco NCS 4200 Series document.

# Safety Guidelines for Personal Safety and Equipment Protection

The following guidelines help ensure your safety and protect the equipment. This list does not include all the potentially hazardous situations. Therefore, you should be on alert.

- Before moving the system, always disconnect all the power cords and interface cables.
- Never assume that power is disconnected from a circuit; always check.
- Before and after installation, keep the chassis area clear and dust free.
- Keep tools and assembly components away from walk areas where you or others could trip over them.
- Do not work alone if potentially hazardous conditions exist.
- Do not perform any action that creates a potential hazard to people or makes the equipment unsafe.
- Do not wear loose clothing that may get caught in the chassis.
- When working under conditions that may be hazardous to your eyes, wear safety glasses.

# Safety Precautions for Module Installation and Removal

To see the safety precautions for module installation and removal, see the *Regulatory Compliance and Safety Information for the Cisco NCS 4200 Series* document.

# Safety with Electricity

To see the safety with electricity, see the *Regulatory Compliance and Safety Information for the Cisco NCS 4200 Series* document.

When working on equipment powered by electricity, follow these guidelines:

- Locate the room's emergency power-off switch. If an electrical accident occurs, you will be able to quickly turn off the power.
- Before starting work on the system, turn off the DC main circuit breaker and disconnect the power terminal block cable.
- Before doing the following, disconnect all power:
  - Working on or near power supplies
  - Installing or removing a chassis or network processor module
  - Performing most hardware upgrades
- Never install equipment that appears damaged.
- Carefully examine your work area for possible hazards, such as moist floors, ungrounded power extension cables, and missing safety grounds.
- Never assume that power is disconnected from a circuit; always check.
- Never perform any action that creates a potential hazard to people or makes the equipment unsafe.

- If an electrical accident occurs, proceed as follows:
  - Use caution, and do not become a victim yourself.
  - Turn off power to the chassis.
  - If possible, send another person to get medical aid. Otherwise, determine the condition of the victim, and then call for help.
  - Determine whether the person needs rescue breathing or external cardiac compressions; then take appropriate action.

In addition, use the following guidelines when working with any equipment that is disconnected from a power source, but still connected to telephone wiring or network cabling:

- Never install telephone wiring during a lightning storm.
- Never install telephone jacks in wet locations unless the jack is specifically designed for it.
- Never touch uninsulated telephone wires or terminals unless the telephone line is disconnected at the network interface.
- When installing or modifying telephone lines, use caution.

# Power Supply Considerations

Check the power at your site to ensure that you are receiving clean power (free of spikes and noise). Install a power conditioner, if necessary.

# Preventing ESD Damage

**Warning** This equipment needs to be grounded. Use a green and yellow 6 AWG ground wire to connect the host to earth ground during normal use. Statement 383

Electrostatic discharge (ESD) can damage equipment and impair electrical circuitry. ESD may occur when electronic printed circuit cards are improperly handled and can cause complete or intermittent failures. When removing and replacing modules, always follow ESD prevention procedures:

- Ensure that the chassis is electrically connected to earth ground.
- Wear an ESD-preventive wrist strap, ensuring that it makes good skin contact. To channel unwanted ESD voltages safely to ground, connect the clip to an unpainted surface of the chassis frame. To guard against ESD damage and shocks, the wrist strap and cord must operate effectively.
- If no wrist strap is available, ground yourself by touching a metal part of the chassis.
- When installing a component, use any available ejector levers or captive installation screws to properly seat the bus connectors in the backplane or midplane. These devices prevent accidental removal, provide proper grounding for the system, and help to ensure that bus connectors are properly seated.
- When removing a component, use available ejector levers or captive installation screws, if any, to release the bus connectors from the backplane or midplane.
- Handle components by their handles or edges only; do not touch the printed circuit boards or connectors.
- Place a removed component board side up on an antistatic surface or in a static-shielding container. If you plan to return the component to the factory, immediately place it in a static-shielding container.
- Avoid contact between the printed circuit boards and clothing. The wrist strap only protects components from ESD voltages on the body; ESD voltages on clothing can still cause damage.
- Never attempt to remove the printed circuit board from the metal carrier.

**Note** For the safety of your equipment, periodically check the resistance value of the antistatic wrist strap. It should be between 1 and 10 Mohm.

# Site Planning

The following sections describe how to plan for the installation of the Cisco NCS 4202:

## General Precautions

Observe the following general precautions when using and working with your chassis:

- Keep your system components away from radiators and heat sources and do not block cooling vents.
- Do not spill food or liquids on your system components and never operate the product in a wet environment.
- Do not push any objects into the openings of your system components. Doing so can cause fire or electric shock by shorting out interior components.
- Position system cables and power supply cable carefully. Route system cables and the power supply cable and plug so that they are not stepped on or tripped over. Be sure that nothing else rests on your system component cables or power cable.
- Do not modify power cables or plugs. Consult a licensed electrician or your power company for site modifications. Always follow your local and national wiring rules.
- If you turn off your system, wait at least 30 seconds before turning it on again to avoid damage of system components.

## Site Planning Checklist

Use the following checklist to perform and account for all the site planning tasks described in this chapter:

- The site meets the environmental requirements.
- The site's air conditioning system can compensate for the heat dissipation.
- The floor space that the chassis occupies can support the weight of the system.
- Electrical service to the site complies with the requirements.
- The electrical circuit servicing the chassis complies with the requirements.
- Consideration has been given to the console port wiring and limitations of the cabling involved, according to TIA/EIA-232F.
- The chassis's Ethernet cabling distances are within the prescribed limitations.
- The equipment rack in which you plan to install the chassis complies with prescribed requirements.
- When selecting the location of the rack, careful consideration must be given to safety, ease of maintenance, and proper airflow.

## Site Selection Guidelines

The chassis requires specific environmental operating conditions. Temperature, humidity, altitude, and vibration can affect the performance and reliability of the chassis. The following sections provide specific information to help you plan for the proper operating environment.

The Cisco NCS 4202 is designed to meet the industry EMC, safety, and environmental standards described in the *Regulatory Compliance and Safety Information for the Cisco NCS 4200 Series* document.

## Environmental Requirements

Environmental monitoring of the chassis protects the system and components from damage caused by excessive voltage and temperature conditions. To ensure normal operation and avoid unnecessary maintenance, plan and prepare your site configuration *before* installation. After installation, make sure that the site maintains the environmental characteristics described in Cisco NCS 4202 Specifications table.

For an outside plant installation (cell site cabinet, hut etc.), it is required that the chassis be protected against airborne contaminants, dust, moisture, insects, pests, corrosive gases, polluted air or other reactive elements present in the outside air. To achieve this level of protection, we recommend that the unit be installed in a fully sealed enclosure or cabinet. Examples of such cabinets include IP65 cabinets with heat exchanger complying with Telecordia GR487. Temperature must be maintained within –40º C to 70º C.

The equipment shall be placed inside a space protected from direct outside weather and environmental stresses by an enclosure, and where the operating climate, as defined by Class 2 of GR-3108-CORE, is between

- -40°C (-40°F) and 70°C (158°F)
- 5 and 90% RH.

## Physical Characteristics

Be familiar with the physical characteristics of the chassis to assist you in placing the system in the proper location. For more information, see Cisco NCS 4202 Specifications table.

# Air Flow Guidelines

Cool air is circulated through the chassis by fans located along the back side of the chassis.

The internal fans maintain acceptable operating temperatures for the internal components by drawing in cool air through the vents, and circulating the air through the chassis.

The direction of air flow is from front-to-back.

*Figure 5: Air Flow in the Cisco NCS 4202 Series*

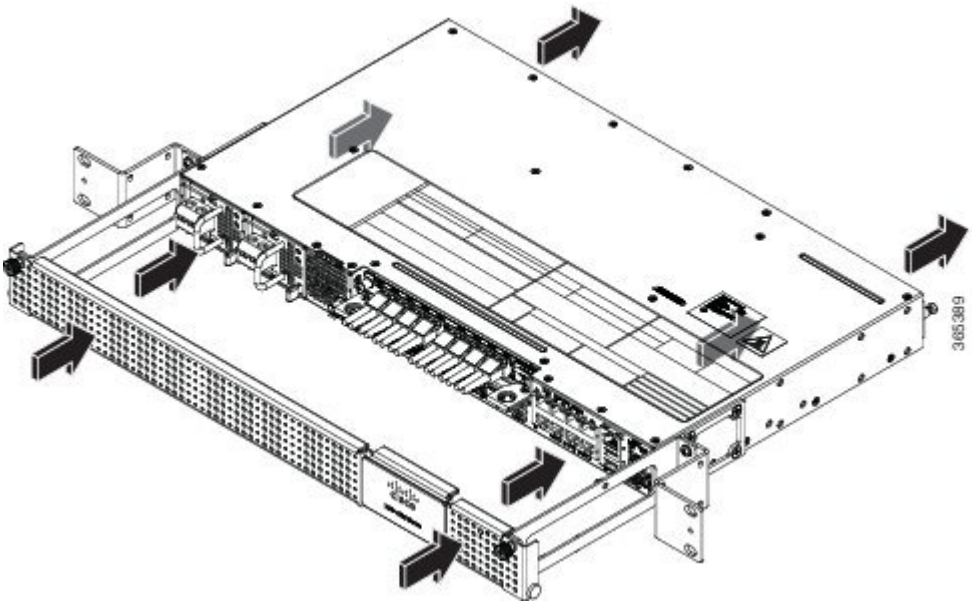


To ensure adequate air flow through the equipment rack, it is recommended that you maintain a minimum clearance distance as mentioned below, at all times.

- rear clearance—14 cm

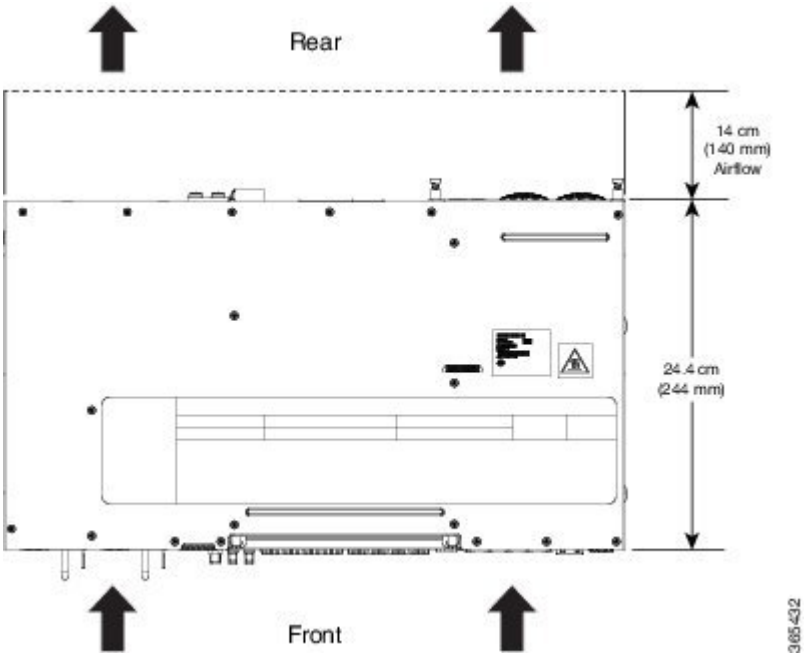

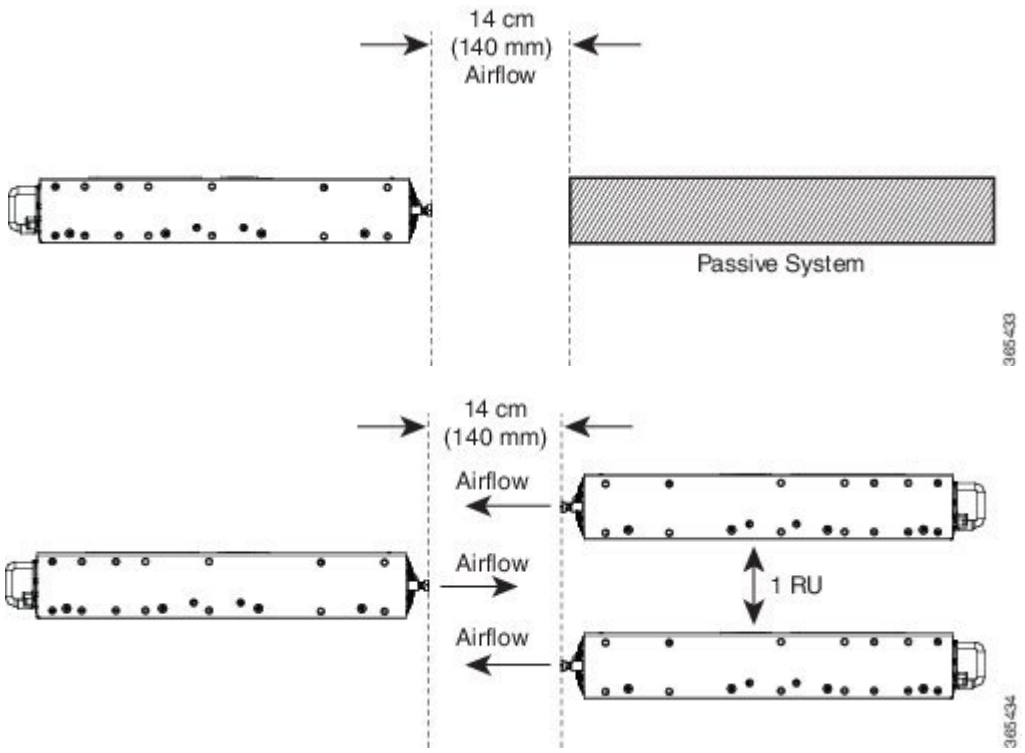


Note the following points:

- When installing the chassis in a back-to-back position with another device, ensure that there is a minimum of 14 cm air flow clearance between the two devices.
- If airflow through the equipment rack and the chassis that occupy it is blocked or restricted, or if the ambient air being drawn into the rack is too warm, an overtemperature condition may occur within the rack and the chassis that occupies it.
- The site should also be as dust-free as possible. Dust tends to clog the chassis fans, reducing the flow of cooling air through the equipment rack and the chassis that occupies it, thus increasing the risk of an overtemperature condition.
- Enclosed racks must have adequate ventilation. Ensure that the rack is not congested because each chassis generates heat. An enclosed rack should have louvered sides and a fan to provide cooling air. Heat that is generated by the equipment near the bottom of the rack can be drawn upward into the intake ports of the equipment above.
- When mounting a chassis in an open rack, ensure that the rack frame does not block the exhaust fans.
- When rack-installed equipment fails, especially equipment in an enclosed rack, try operating the equipment by itself, if possible. Power off all the other equipment in the rack (and in adjacent racks) to give the chassis maximum cooling air and clean power.
- Avoid installing the chassis in a location in which the chassis air intake vents may draw in the exhaust air from adjacent equipment. Consider how the air flows through the chassis; the airflow direction is front to back, with ambient air drawn in from the vents located on the sides of the chassis.

⚠

**Caution** When mounting the chassis in any type of rack equipment, ensure that the inlet air to the chassis does not exceed 70° C.

# Floor Loading Considerations

Ensure that the floor under the rack supporting the chassis is capable of supporting the combined weight of the rack and all the other installed equipment.

To assess the weight of a fully configured Cisco NCS 4202, see the Cisco NCS 4202 Specifications table .

For additional information about floor loading requirements, see the GR-63-CORE, Network Equipment Building System (NEBS) Requirements: Physical Protection document.

# Site Power Guidelines

The chassis has specific power and electrical wiring requirements. Adhering to these requirements ensures reliable operation of the system. Follow these precautions and recommendations when planning your site power for the chassis:

- The redundant power option provides a second, identical power supply to ensure that power to the chassis continues uninterrupted if one power supply fails or input power on one line fails.
- Connect each of the two power supplies to a separate input power source. If you fail to do this, your system might be susceptible to total power failure due to a fault in the external wiring or a tripped circuit breaker.
- To prevent a loss of input power, be sure that the total maximum load on each circuit supplying the power supplies is within the current ratings of the wiring and the breakers.
- Check the power at your site before installation, and periodically after installation to ensure that you are receiving clean power. Install a power conditioner, if necessary.
- Provide proper grounding to avoid personal injury and damage to the equipment due to lightning striking power lines or due to power surges. The chassis ground must be attached to a central office or other interior ground system.

**Caution** This product requires short-circuit (overcurrent) protection to be provided as part of the building installation. Install only in accordance with national and local wiring regulations.

**Note** The chassis installation must comply with all the applicable codes, and is approved for use with copper conductors only. The ground bond-fastening hardware should be of compatible material and preclude loosening, deterioration, and electrochemical corrosion of hardware and joined material. Attachment of the chassis ground to a central office or other interior ground system must be made with a 6-AWG gauge wire copper ground conductor at a minimum.

For information on power specifications, see Power Supply Specification table .

## Electrical Circuit Requirements

Each chassis requires a dedicated electrical circuit. If you equip the chassis with dual-power feeds, provide a separate circuit for each power supply to avoid compromising the power redundancy feature.

The chassis can be powered by a DC source or an AC source. Ensure that equipment grounding is present and observe the power-strip ratings. Make sure that the total ampere rating of all the products plugged into the power strip does not exceed 80% of the rating.

# Site Cabling Guidelines

This section contains guidelines for wiring and cabling at your site. When preparing your site for network connections to the chassis, consider the type of cable required for each component, and the cable limitations. Consider the distance limitations for signaling, electromagnetic interference (EMI), and connector compatibility. Possible cable types are fiber, thick or thin coaxial, foil twisted-pair, or unshielded twisted-pair cabling.

Also consider any additional interface equipment you need, such as transceivers, hubs, switches, modems, channel service units (CSU), or data service units (DSU).

Before you install the chassis, have all the additional external equipment and cables on hand. For information about ordering, contact a Cisco customer service representative.

The extent of your network and the distances between the network interface connections depend, in part, on the following factors:

- Signal type
- Signal speed
- Transmission medium

The distance and rate limits referenced in the following sections are the IEEE-recommended maximum speeds and distances for signaling purposes. Use this information as a guideline when planning your network connections >*prior to* installing the chassis.

If wires exceed the recommended distances, or if wires pass between buildings, give special consideration to the effect of a lightning strike in your vicinity. The electromagnetic pulse caused by lightning or other high-energy phenomena can easily couple enough energy into unshielded conductors to destroy electronic devices. If you have had problems of this sort in the past, you may want to consult experts in electrical surge suppression and shielding.

## Asynchronous Terminal Connections

The chassis provides a console port to connect a terminal or computer for local console access. The port has an RJ-45 connector and supports RS-232 asynchronous data with distance recommendations specified in the IEEE RS-232 standard.

## Interference Considerations

When wires are run for any significant distance, there is a risk that stray signals will be induced on the wires as interference. If interference signals are strong, they may cause data errors or damage to the equipment.

The following sections describe the sources of interference and how to minimize their effects on the chassis.

### Electromagnetic Interference

All the equipment powered by AC current can propagate electrical energy that can cause EMI and possibly affect the operation of other equipment. The typical sources of EMI are equipment power cords and power service cables from electric utility companies.

Strong EMI can destroy the signal drivers and receivers in the chassis and even create an electrical hazard by causing power surges through the power lines into installed equipment. These problems are rare, but could be catastrophic.

To resolve these problems, you need specialized knowledge and equipment that could consume substantial time and money. However, you can ensure that you have a properly grounded and shielded electrical environment, paying special attention to the need for electrical surge suppression.

For information about the electrode magnetic compliance standards supported on the Cisco NCS 4202, see the *Regulatory Compliance and Safety Information for the Cisco NCS 4200 Series* document.

### Radio Frequency Interference

When electromagnetic fields act over a long distance, radio frequency interference (RFI) may be propagated. Building wiring can often act as an antenna, receiving the RFI signals and creating more EMI on the wiring.

If you use twisted-pair cable in your plant wiring with a good distribution of grounding conductors, the plant wiring is unlikely to emit radio interference. If you exceed the recommended distances, use a high-quality twisted-pair cable with one ground conductor for each data signal.

### Lightning and AC Power Fault Interference

If signal wires exceed the recommended cabling distances, or if signal wires pass between buildings, you should consider the effect that a lightning strike in your vicinity might have on the chassis.

The electromagnetic pulse (EMP) generated by lightning or other high-energy phenomena can couple enough energy into unshielded conductors to damage or destroy electronic equipment. If you have previously experienced such problems, you should consult with RFI and EMI experts to ensure that you have adequate electrical surge suppression and shielding of signal cables in your Cisco NCS 4202 operating environment.

# Rack-Mounting Guidelines

The following sections provide guidelines for rack-mounting:

## Precautions for Rack-Mounting

The following rack-mount guidelines are provided to ensure your safety:

- Ensure that the rack is level and stable before extending a component from the rack.
- Ensure that proper airflow is provided to the components in the rack.
- Do not step on or stand on any component or system when servicing other systems or components in a rack.
- When mounting the chassis in a partially filled rack, load the rack from the bottom to the top, with the heaviest component at the bottom of the rack.
- If the rack is provided with stabilizing devices, install the stabilizers before mounting or servicing the unit in the rack.

## Rack Selection Guidelines

The chassis can be mounted in most two-post or four-post, 19-inch equipment racks that comply with the Electronic Industries Association (EIA) standard for equipment racks (EIA-310-D 19-inch). The rack must have at least two posts with mounting flanges to mount the chassis.

⚠

**Caution** When mounting a chassis in any type of rack equipment, ensure that the inlet air to the chassis does not exceed 70° C.

The distance between the center lines of the mounting holes on the two mounting posts must be 18.31 inch ± 0.06 inch (46.50 cm ± 0.15 cm). The rack-mounting hardware included with the chassis is suitable for most 19-inch equipment racks.

Consider installing the chassis in a rack with the following features:

- NEBS-compliant, 19-inch wide (48.3-cm) rack.
- Perforated top and open bottom for ventilation to prevent overheating.
- Leveling feet for stability.

**Caution** The Cisco NCS 4202 is not recommended to be installed in an enclosed rack because the chassis requires an unobstructed flow of cooling air to maintain acceptable operating temperatures for its internal components. If you use an enclosed rack, ensure that the air flow requirements are maintained as discussed in Air Flow Guidelines.

## Equipment Rack Guidelines

The placement of a rack can affect personnel safety, system maintenance, and the system's ability to operate within the environmental characteristics. Choose a proper location for the chassis by following the guidelines described here.

### Locating for Safety

If the Cisco NCS 4202 is the heaviest or the only piece of equipment in the rack, consider installing it at or near the bottom to ensure that the rack's center of gravity is as low as possible.

For additional information about the proper placement of electronic equipment, consult the GR-63-CORE, Network Equipment Building System (NEBS) Requirements: Physical Protection document.

### Locating for Easy Maintenance

It is recommended that you maintain a minimum clearance distance as mentioned below, at all times.

- rear clearance—14 cm

This space ensures that you can remove the chassis components and perform routine maintenance and upgrades easily.

Avoid installing the chassis in a congested rack and consider how routing of cables from other pieces of equipment in the same rack could affect access to the chassis cards.

The front and rear of the chassis must remain unobstructed to ensure adequate airflow and prevent overheating inside the chassis.

To avoid problems during installation and ongoing operations, follow these general precautions when you plan equipment locations and connections:

- Use the **show environment all** command regularly to check the internal system status. The environmental monitor continually checks the interior chassis environment; it provides warnings about high temperature and creates reports on other potentially dangerous occurrences. If warning messages are displayed, take immediate action to identify the cause, and correct the problem.
- Keep the chassis off the floor and out of areas that collect dust.
- Follow ESD-prevention procedures to avoid damage to equipment. Damage from static discharge can cause immediate or intermittent equipment failure.

### Locating for Proper Airflow

Ensure that the chassis location has enough airflow to keep the system operating within the environmental characteristics and the air temperature is sufficient to compensate for the heat dissipated by the system. For more information, see the *Air Flow Guidelines* section.

## Installation Checklist

To assist you with your installation and to provide a record of what was done by whom and when, photocopy the Cisco NCS 4202 Installation Checklist shown in table below. Use this to record the completion and verification of each procedure. After the checklist is completed, place it in your Site Log along with the other records pertaining to your new Cisco chassis.

| Task | Verified By | Date |
|---|---|---|
| Date on which chassis received | | |
| Chassis and all accessories unpacked | | |
| Types and numbers of interfaces verified | | |
| Safety recommendations and guidelines reviewed | | |
| Installation Checklist copied | | |
| Site Log established and background information entered | | |
| Site power voltages verified | | |
| Site environmental specifications verified | | |
| Required passwords, IP addresses, device names, and so on, available | | |
| Required tools available | | |
| Network connection equipment available | | |
| Cable-management brackets installed (optional, but recommended) | | |
| AC power cables connected to AC sources and chassis | | |
| DC power cables connected to DC sources and chassis | | |
| Network interface cables and devices connected | | |
| System power turned on | | |
| System boot complete (STATUS LED is on) | | |
| Correct software configuration displayed after system banner appears | | |

# Creating a Site Log

The Site Log provides a record of all the actions related to installing and maintaining the chassis. Keep it in an accessible place near the chassis so that anyone who performs tasks has access to it.

Create the Site Log prior to the installation. (See “Site Log” for more information about the Site Log as well as a sample Site Log that can be used to make copies.)

# Chassis-Lifting Guidelines

The chassis is not intended to be moved frequently. Before you install the system, ensure that your site is properly prepared so that you can avoid having to move the chassis later to accommodate power sources and network connections.

Each time you lift the chassis or any heavy object, follow these guidelines:

- Ensure that your footing is solid, and balance the weight of the chassis between your feet.
- Lift the chassis slowly; never move suddenly or twist your body as you lift.
- Keep your back straight and lift with your legs, not your back. If you must bend down to lift the chassis, bend at the knees, not at the waist, to reduce the strain on your back muscles.
- Do not remove installed components from the chassis.
- Always disconnect all external cables before lifting or moving the chassis.

**Warning** To prevent personal injury or damage to the chassis, never attempt to lift or tilt the chassis using the handles on modules (such as power supplies, fans, or cards); these types of handles are not designed to support the weight of the unit. Lift the unit only by using handles that are an integral part of the chassis, or by grasping the chassis underneath its lower edge. Statement 163

# Tools and Equipment

You need the following tools and equipment to install and upgrade the chassis and its components:

- ESD-preventive cord and wrist strap
- Antistatic mat or antistatic foam
- Number 1 and Number 2 Phillips-head screwdrivers
- #12-24 pan-head screws to secure the chassis to the equipment rack
- Cables for connecting to the network ports (depending on the configuration)

**Note** For more information about cable specifications, see the Troubleshooting section.

- Ethernet hub, switch, or PC with a network interface card for connecting to the Ethernet ports
- Console terminal (an ASCII terminal or a PC running terminal emulation software) that is configured for 9600 baud, 8 data bits, no parity, no flow control, and 1stop bit
- Console cable for connecting to the console port
- Ratcheting torque screwdriver with a Phillips head that exerts up to 30-pound force per square inch (in-lb) or 0.02-kilograms force per square millimeter (kgf/mm2) of pressure

- Crimping tool as specified by the ground lug manufacturer
- Wire-stripping tools for stripping both 6-AWG and 12-AWG wires
- Tape measure and level

**Warning** Only trained and qualified personnel should be allowed to install or replace this equipment. Statement 49

# Unpacking and Verifying the Shipped Contents

When you receive your chassis, perform the following steps:

1. Inspect the box for any shipping damage. If there is obvious physical damage, contact your Cisco service representative.
2. Unpack the chassis.
3. Perform a visual inspection of the chassis.
4. Use below table to check the contents of the chassis shipping container. Do not discard the shipping container. You will need the container if you move or ship the chassis in the future.

***Table 12: Default Shipping Container Contents***

| Component | Description |
|---|---|
| Chassis (PID: NCS4202-SA=) | Cisco NCS 4202 shelf assembly with 4x10GE + 12xGE/FE + 1 slot<br>Fan tray (PID: ASR-920-FAN-M). By default, the fan tray is installed in the chassis. |
| NCS 4202 DC Starter kit (NCS4202D-STRT-KIT=) | Chassis NCS4202-SA<br>XE-NCS42XX-318<br>Door: NCS4200-1RU-DOOR<br>Fan Tray: ASR-920-FAN-M<br>DC Power Supply: ASR-920-PWR-D |
| NCS 4202 AC Starter kit (NCS4202A-STRT-KIT=) | Chassis NCS4202-SA<br>XE-NCS42XX-318<br>Door: NCS4200-1RU-DOOR<br>Fan Tray: ASR-920-FAN-M<br>DC Power Supply: ASR-920-PWR-A |
| ESD, wrist strap (disposable) | One disposable wrist strap (optional) |
| Documentation | Cisco NCS 4200 Series Pointer Card |

| Component | Description |
|---|---|
| Optional equipment | Check the container for the following optional equipment:<br>• AC and DC power supplies<br>**Note**<br>The AC and DC power supplies are provided as ordered.<br>• Power cord if an AC power supply was shipped. There are no cords for the DC power supply units.<br>**Note**<br>If you do not specify the type of power cable, US power cable for the AC chassis variant is supplied. |

**Note** Most Cisco documentation is available online. The *Cisco NCS 4200 Series Pointer Card* that is shipped with your Cisco NCS 4202 contains links and information about the various documents that are available online.

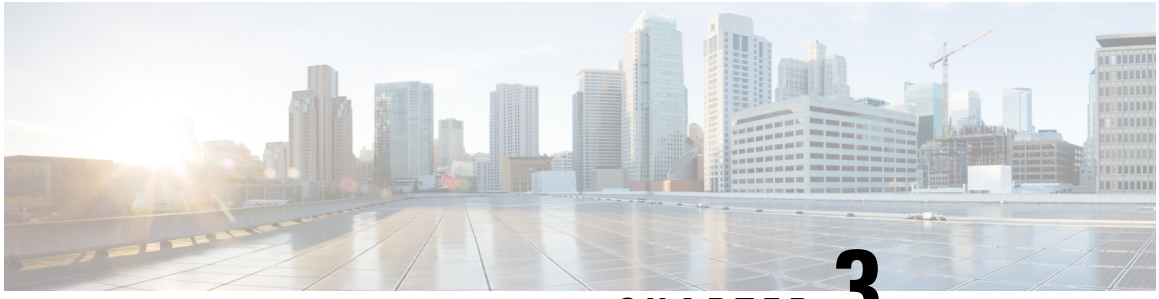

CHAPTER 3

# Installing the Cisco NCS 4202 Series Chassis

This chapter describes how to install the chassis and includes the following sections:


- Prerequisites, on page 31
- Installing the Chassis in a Rack, on page 31
- Wall Mounting the Router, on page 38
- Installing and Removing SFP Modules, on page 41
- Connecting to the Copper Ports, on page 44
- Installing the Chassis Ground Connection, on page 46
- Installing and Removing the Fan Tray, on page 48
- Interface Module Installation, on page 51
- Installing Patch Panel, on page 52
- Install 3G Patch Panel, on page 61
- Patch Panel Dimensions, on page 83
- Patch Panel Pinout, on page 87
- Panel and Bracket, on page 88
- Installing the Power Supply, on page 88
- Connecting the Chassis to the Network, on page 98


## Prerequisites

Before installing the chassis, it is important to prepare for the installation by:

- Preparing the site (site planning) and reviewing the installation plans or method of procedures (MOP). See *Site Planning* section.
- Unpacking and inspecting the chassis. See *Chassis-Lifting Guidelines* section.
- Gathering the tools and test equipment required to properly install the chassis. See *Tools and Equipment* section.

For more instructions on how to prepare for the installation of the chassis, see *Preparing for Installation*.

## Installing the Chassis in a Rack

Each Cisco NCS 4202 chassis includes the door with Z-rack-mounting brackets. Using the rack-mounting brackets, you can mount the chassis on the front or rear of the rack.

Using the two rack-mounting brackets for mounting, you can recess the chassis in the equipment rack. This arrangement provides extra space in front of the chassis for the cables and allows you to close the doors of racks equipped with front-close doors.

To attach or replace the rack-mounting brackets, see the *Installing the Chassis Brackets* section.

The rack-mounting brackets are slotted to allow the chassis to be mounted in racks with EIA 1.25-inch (3.175-cm) or WECO 1.0-inch (2.54-cm) hole spacing. When installed in the rack, the chassis requires one EIA 1.75-inch (4.4-cm) vertical mounting space (or 1 rack unit [RU]) for mounting (see the *Mounting the Chassis in a Rack* section).

**Caution** Allow clearance on either side of the chassis for cooling air to be drawn in through the right side and circulated through the chassis and out the three-fan exhaust ports mounted on the other side of chassis.

The following sections describe how to install the chassis in a rack. The procedures in this section apply to both horizontal and vertical mounting of the chassis in a rack:

# Installing the Chassis Brackets

The chassis is shipped with Z-mounting brackets that can be installed on the front of the chassis.

**Warning** Ensure that you use screws that is provided with the rack mount bracket only. Screw should be secured only with the rack mount bracket in place.

***Figure 6: Z Rack Mounting Bracket***

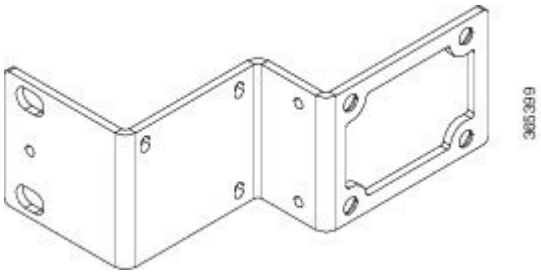


To install the brackets on the front of the chassis, perform these steps:

*Figure 7: Rack-Mounting Brackets*

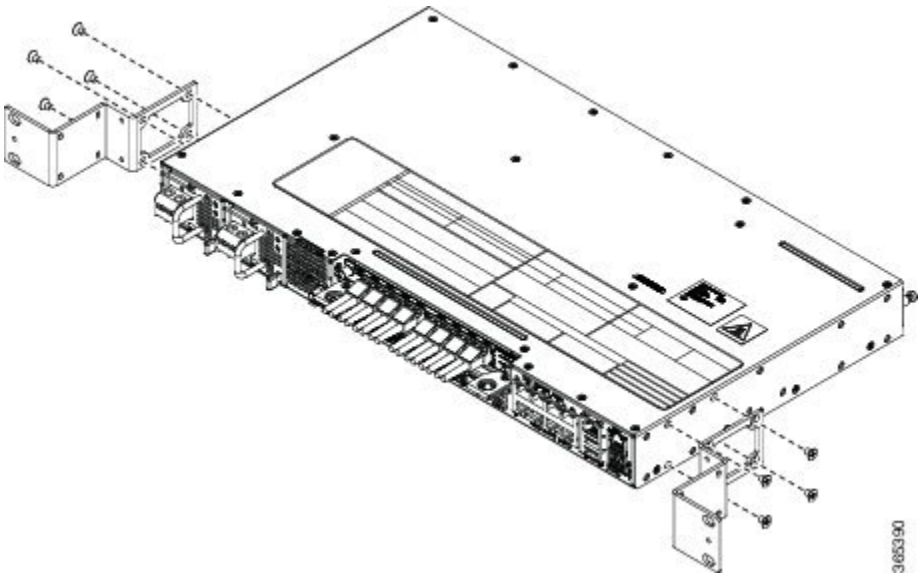


# Mounting the Chassis in a Rack

Perform the steps given below to mount the chassis into the equipment rack.

**Note** To secure the chassis to the equipment rack, you must use the two mounting screws (provided) for each side or follow your local practices for installing the chassis into your equipment rack. Ensure that the rack-mount brackets are securely fastened. For more information, see the *Installing the Chassis Brackets* section .

### Procedure

**Step 1** Locate the equipment rack position where you plan to install the chassis.

**Step 2** Verify that there are no obstructions and ensure that the equipment rack is stabilized.

**Step 3** Install the chassis brackets. The Rack-mounting brackets figure shows the types of mounting brackets.

**Step 4** Locate the mounting holes of the chassis.

**Step 5** Align the rack-mounting bracket with the chassis and position with the four #6-32 x 0.25-inch screws (provided).

**Step 6** Insert the screws (four places) and tighten using a Number 2 Phillips screwdriver (each side).

**Step 7** Position the chassis in the equipment rack lining up the bracket holes on the chassis with the holes on the rack and secure with four #6-32 x 0.25-inch mounting screws (two on each side).

**Step 8** Tighten the screws using a 1/4-inch flat-blade screwdriver (each side). The recommended maximum torque is 10 in.-lb.

# Installing the Chassis in the Rack

**Note** Ensure adequate air flow when mounting the chassis in a rack. For more information, see the *Air Flow Guidelines* section.

**Note** Install the cable guides before installing the chassis in a 19-inch EIA rack. See *Attaching the Cable Guides*.

To install the chassis in the equipment rack, perform these steps:

**Procedure**

**Step 1** Position the chassis in the rack as follows:

- If the front of the chassis (front panel) is at the front of the rack, insert the rear of the chassis between the mounting posts.
- If the rear of the chassis is at the front of the rack, insert the front of the chassis between the mounting posts.

**Step 2** Align the mounting holes in the bracket (and optional cable guide) with the mounting holes in the equipment rack.

The following figure shows how to install the chassis in a 19-inch EIA rack.

*Figure 8: Installing the Chassis in the Rack*

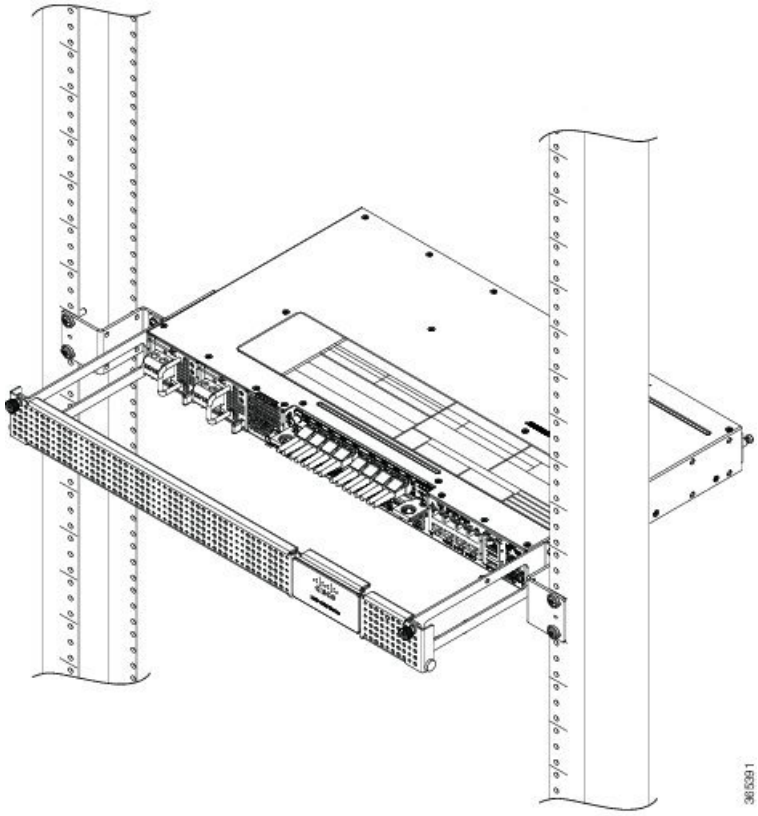


**Step 3** Install the four M6x12mm zinc-plated steel screws through the holes in the bracket and into the threaded holes in the equipment rack posts.

**Step 4** Use a tape measure and level to verify that the chassis is installed straight and level.

# Attaching the Cable Guides

You can guide the cables on the Cisco NCS 4202 through the cable bracket:

The cable bracket helps in routing the cables from all components on the front panel thereby enabling a proper cable-bending radius.

To install the cable guides, perform these steps:

**Procedure**

**Step 1** Position the cable guide-left and cable guide-right against the front of the chassis and align the four screw holes, as shown in figure below.

*Figure 9: Installing the Cable Bracket*

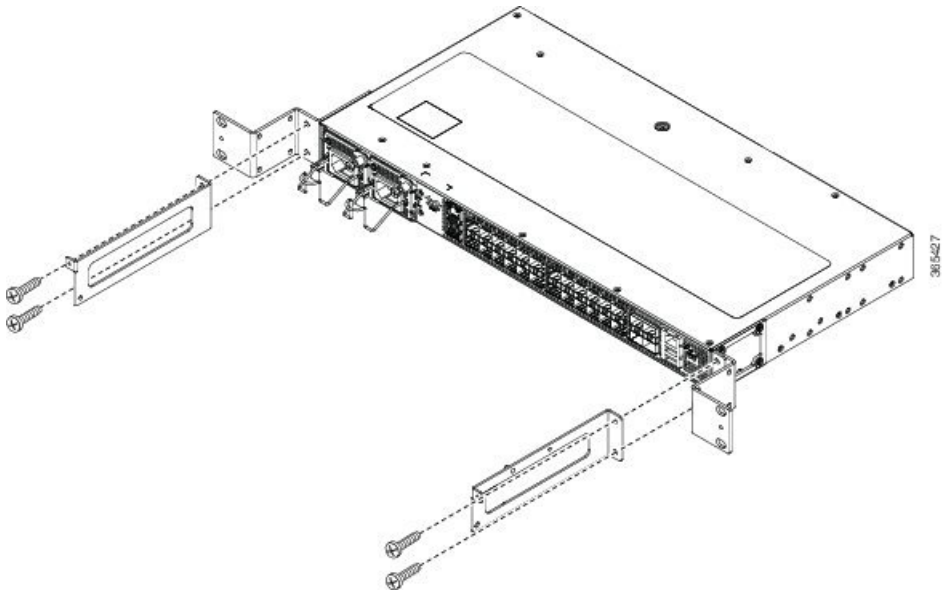


*Figure 10: Guiding the Cables from the Front Panel through the Cable Brackets*

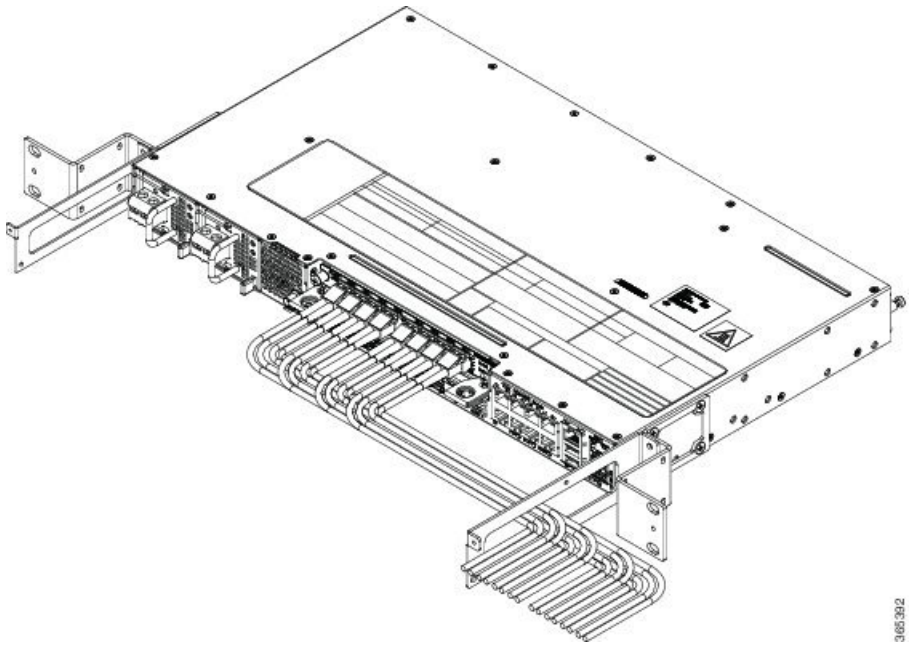


**Step 2** Secure the cable guides with the four M6x12mm screws supplied with the cable kit. The recommended maximum torque is 3N-m.

# Installing and Removing the Front Door

The front door provides additional space in front of the Cisco NCS 4201 to accommodate cables. You can remove the door to provide unrestricted access to the front of the chassis.

## Installing the Front Door

### Procedure

**Step 1** Align the door with the cable bracket as shown in the figure below.

**Step 2** Tighten the screws on both sides on the top and bottom.

***Figure 11: Installing the Front Door***

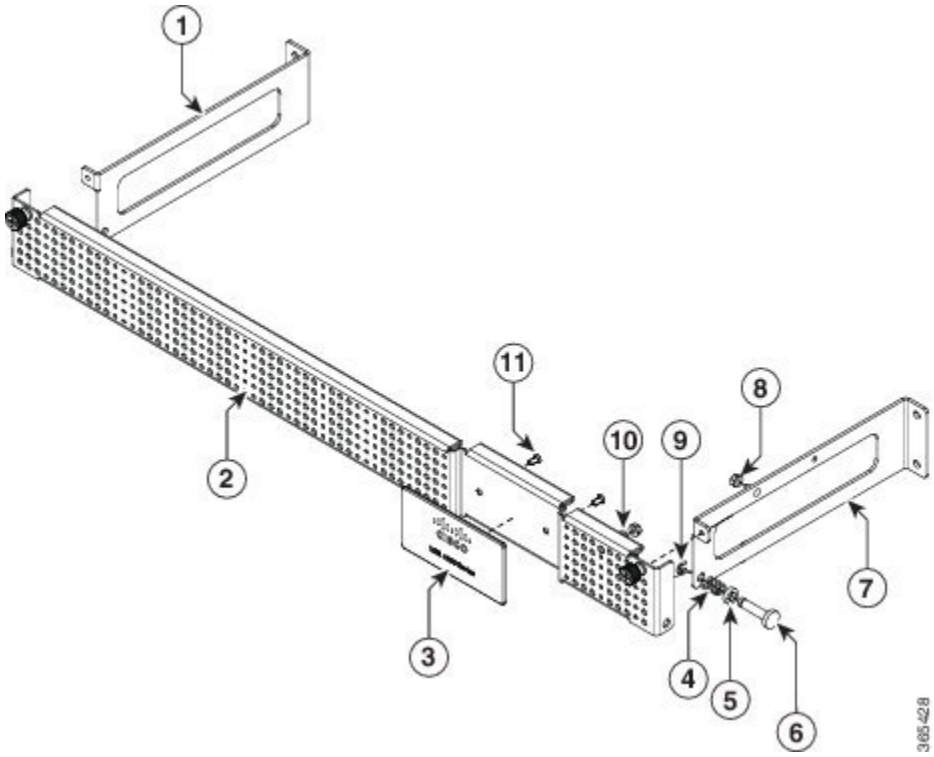


## Removing the Front Door

### Procedure

The door is attached to the cable bracket through screws on both sides on the top and bottom. Loosen the screws on the top left and right corners of the door.

The door falls outwards, hinged to the cable bracket.

***Figure 12: Removing the Front Door***

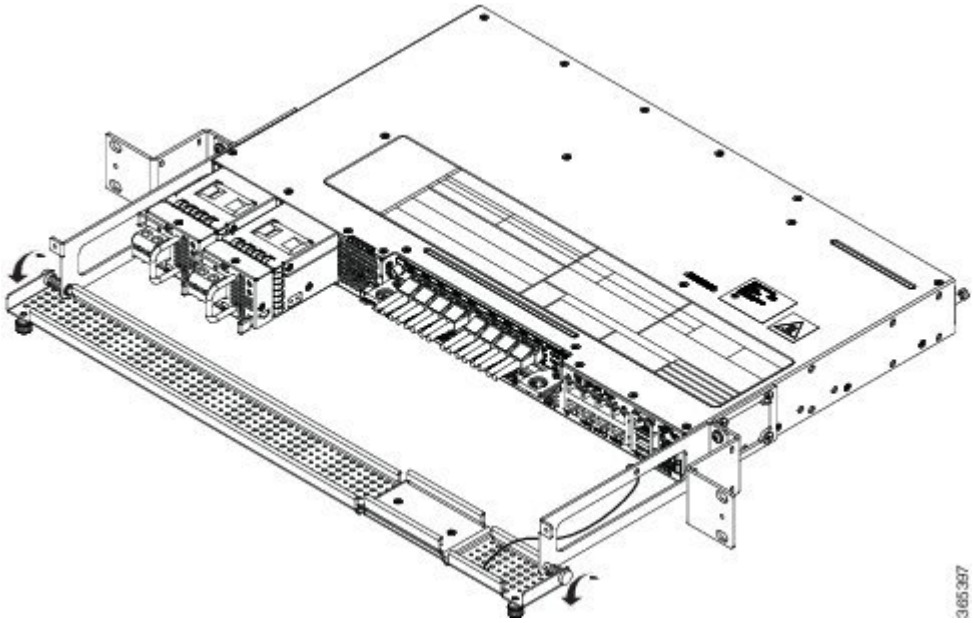


# Wall Mounting the Router

To install the router on a wall, follow the instructions in these procedures:

## Attaching the Brackets to the Router for Wall-Mounting

**Note** While wall mounting the router, always ensure that the power supplies are at the top position.

The figure below shows how to attach a 19-inch bracket to one side of the router. Follow the same steps to attach the second bracket to the opposite side.

*Figure 13: Attaching 19-inch Brackets for Wall Mounting*

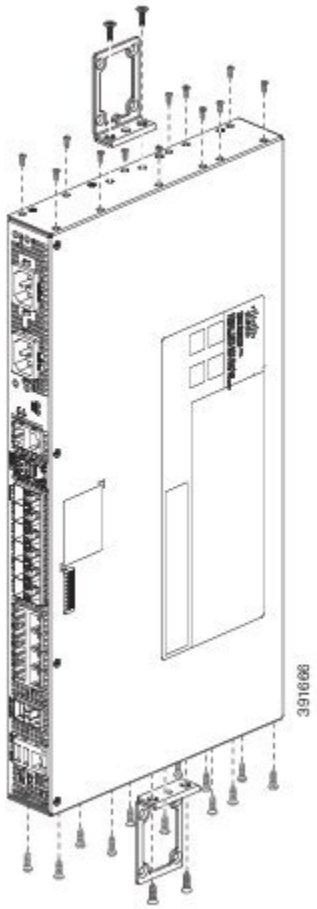


# Mounting the Router on the Wall

For the best support of the router and cables, ensure the router is attached securely to wall studs or to a firmly attached plywood mounting backboard.

**Warning** Suitable for mounting on and over a concrete or other non-combustible surface only. Statement 345

**Caution** Before mounting the router, ensure that all unused holes at the sides of the router are always protected by screws.

*Figure 14: Installing Screws in Unused Holes Before Wall Mounting the Router*

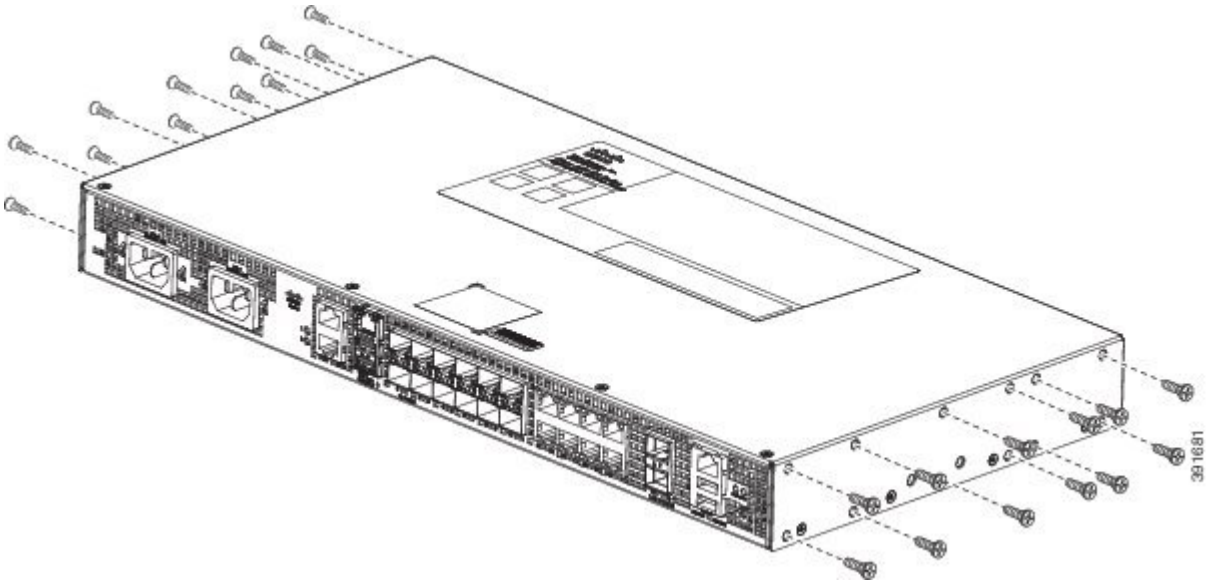


Mount the router with the front panel as shown in the following figure.

*Figure 15: Mounting the Router on the Wall*

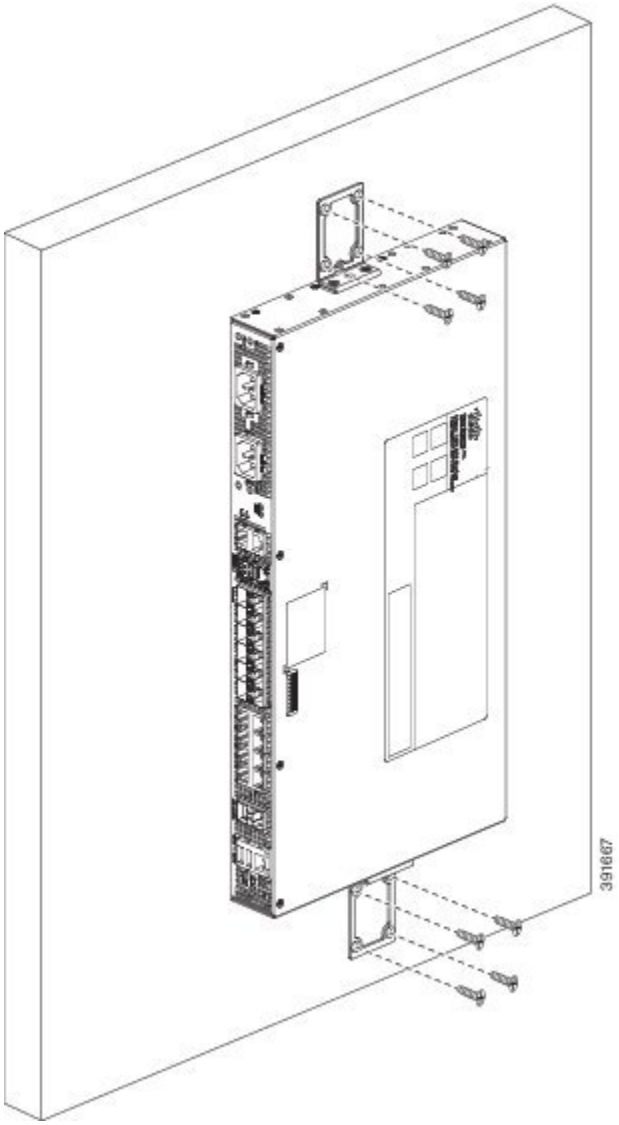


**Caution** When mounting the router vertically, ensure that the power supplies are at the top.

# Installing and Removing SFP Modules

These sections describe how to install and remove SFP modules. The modules are inserted into the SFP module slots as depicted in Installing an SFP Module into an SFP Module Slot figure. These field-replaceable modules provide interfaces.

Each port must match the wavelength specifications on the other end of the cable. For reliable communications, the cable must not exceed the stipulated cable length.

Use only Cisco SFP modules on the Cisco chassis. Each SFP module has an internal serial EEPROM that is encoded with security information. This encoding provides a way for Cisco to identify and validate that the SFP module meets the requirements for the chassis.

For detailed instructions on installing, removing, and cabling the SFP module, see the SFP module documentation.

# Installing SFP Modules

Figure below shows an SFP module that has a bale-clasp latch.

**Caution** We strongly recommend that you do not install or remove fiber-optic SFP modules with cables attached because of the potential damage to the cables, the cable connector, or the optical interfaces in the SFP module. Disconnect all cables before removing or installing an SFP module. Removing and installing an SFP module can shorten its useful life. Do not remove and insert SFP modules more often than is absolutely necessary.

***Figure 16: SFP Module with a Bale-Clasp Latch***

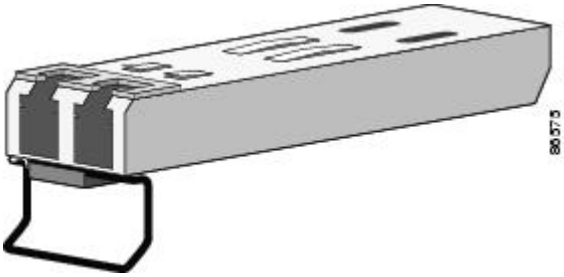

To insert an SFP module into the module slot, follow these steps:

**Procedure**

**Step 1** Attach an ESD-preventive wrist strap to your wrist and to a bare metal surface on the chassis.

Some SFP modules identify the top side of the module with send (TX) and receive (RX) markings or arrows that show the direction of the connection.

**Step 2** If the SFP module that you are using has the markings, use them to identify the top side of the module.

**Step 3** Align the SFP module in front of the slot opening.

**Step 4** Insert the SFP module into the slot until you feel the connector on the module snap into place in the rear of the slot.

*Figure 17: Installing an SFP Module into an SFP Module Slot*

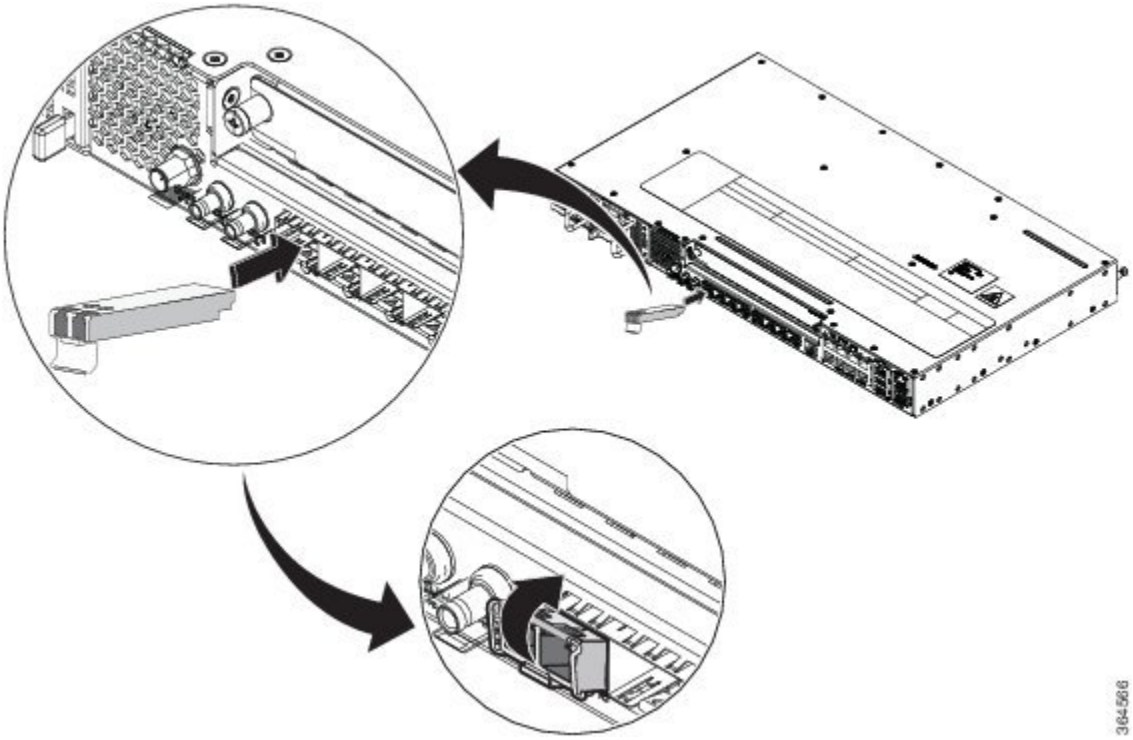


**Caution**
Do not remove the dust plugs from the fiber-optic SFP module port or the rubber caps from the fiber-optic cable until you are ready to connect the cable. The plugs and caps protect the SFP module ports and cables from contamination and ambient light. Store the dust plugs for later use.

**Step 5** Insert the cable connector into the SFP module:

- For fiber-optic SFP modules, insert the LC cable into the SFP module.
- For copper 1000BASE-T SFP modules, insert the RJ-45 cable connector into the SFP module.

# Removing SFP Modules

To remove an SFP module from a module receptacle, follow these steps:

**Procedure**

**Step 1** Attach an ESD-preventive wrist strap to your wrist and to a bare metal surface on the chassis.

**Step 2** Disconnect the cable from the SFP module, and insert a dust plug into the cable end.

**Tip**
For reattachment, note which cable connector plug is send (TX) and which is receive (RX).

**Step 3** Unlock and remove the SFP module, as shown in the following figure.

If the module has a bale-clasp latch, pull the bale out and down to eject the module. If the bale-clasp latch is obstructed and you cannot use your index finger to open it, use a small, flat-blade screwdriver or other long, narrow instrument to open the bale-clasp latch.

***Figure 18: Removing a Bale-Clasp Latch SFP Module***

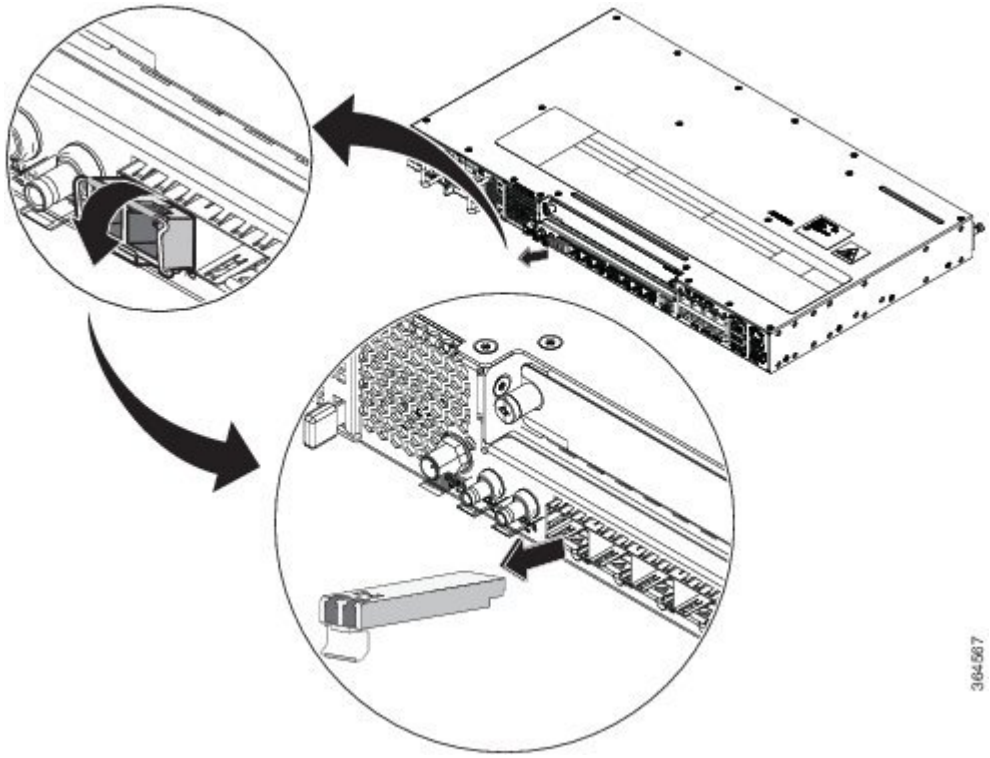


**Step 4** Grasp the SFP module between your thumb and index finger, and carefully remove it from the module slot.

**Step 5** For fiber-optic SFP modules, insert a dust plug into the optical ports of the SFP module to keep the optical interfaces clean.

**Step 6** Place the removed SFP module in an antistatic bag or other protective environment.

# Connecting to the Copper Ports

Copper ports [0:7] are capable of working 10/100/1000 Mbps.

**Note** The chassis copper ports configure themselves to operate at the speed of attached devices. If the attached ports do not support autonegotiation, you can explicitly set the speed and duplex parameters. Connecting devices that do not autonegotiate or that have their speed and duplex parameters manually set can reduce performance or result in no linkage.

To maximize performance, choose one of these methods for configuring the Ethernet ports:

- Let the ports autonegotiate both speed and duplex.
- Set the port speed and duplex parameters on both ends of the connection.

**Procedure**

**Step 1** When connecting to workstations, servers, and chassis, connect a straight-through cable to an RJ-45 connector on the front panel.When connecting to chassis or repeaters, use a crossover cable.

**Note**
You can use the **mdix auto** interface configuration command in the CLI to enable the automatic medium-dependent interface crossover (auto-MDIX) feature. When the auto-MDIX feature is enabled, the chassis detects the required cable type for copper Ethernet connections and configures the interfaces accordingly. Therefore, you can use either a crossover or a straight-through cable for connections to a copper 100/1000, or an SFP module port on the chassis, regardless of the type of device on the other end of the connection.

**Step 2** Connect the other end of the cable to an RJ-45 connector on the other device. The port LED turns on when both the chassis and the connected device have established link.

If the port LED does not turn on, the device at the other end might not be turned on, or there might be a cable problem or a problem with the adapter installed in the attached device.

**Note**
On user network interface (UNI) ports, the port LED is green after the link is established.

**Step 3** Reconfigure and reboot the connected device, if necessary.

**Step 4** Repeat Steps 1 through 3 to connect each device.

# Connecting to SFP Modules

This section describes how to connect to SFP modules. For instructions on how to connect to fiber-optic SFP modules, see the Connecting to Fiber-Optic SFP Modules.

For instructions about how to install or remove an SFP module, see the Installing and Removing SFP Modules.

## Connecting to Fiber-Optic SFP Modules

Follow these steps to connect a fiber-optic cable to an SFP module:

**Warning** Invisible laser radiation may be emitted from disconnected fibers or connectors. Do not stare into beams or view directly with optical instruments. Statement 1051

**Warning** Class 1M laser radiation when open. Do not view directly with optical instruments. Statement 1053

**Warning** Class 1 CDRH) and Class 1M (IEC) laser products. Statement 1055

**Warning** Invisible laser radiation may be emitted from the end of the unterminated fiber cable or connector. Do not view directly with optical instruments. Viewing the laser output with certain optical instruments (for example, eye loupes, magnifiers, and microscopes) within a distance of 100 mm may pose an eye hazard. Statement 1056

**Caution** Do not remove the rubber plugs from the SFP module port or the rubber caps from the fiber-optic cable until you are ready to connect the cable. The plugs and caps protect the SFP module ports and cables from contamination and ambient light.

**Procedure**

**Step 1** Remove the rubber plugs from the module port and fiber-optic cable, and store them for future use.

**Step 2** Insert one end of the fiber-optic cable into the SFP module port.

**Step 3** Insert the other cable end into a fiber-optic connector on a target device.

**Step 4** Observe the port status LED.

The LED turns green when the chassis and the target device have an established link.

If the LED is off, the target device might not be turned on, there might be a cable problem, or there might be problem with the adapter installed in the target device.

**Step 5** If necessary, reconfigure and restart the chassis or target device.

# Installing the Chassis Ground Connection

Before you connect the power or turn on the power to the chassis, you must provide an adequate chassis ground (earth) connection to your chassis.

This section describes how to ground the chassis. The grounding lug location is on the back panel of the chassis.

**Tip** Ensure that the grounding lug wire does not cover the fan opening.

*Figure 19: Attaching a Grounding Lug to the Rear of the chassis*

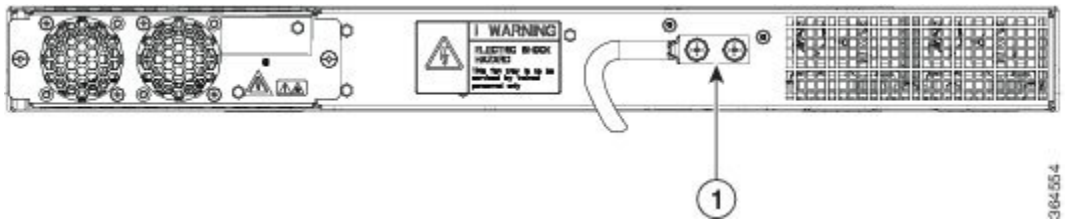


| | |
|---|---|
| 1 | Grounding-lug |

To ensure that the chassis ground connection that you provide is adequate, you need the following parts and tools:

- Ratcheting torque screwdriver with Philips head that exerts up to 20 in.-lb (2.25 N-m) of torque for attaching the ground wire to the Chassis.

  Ensure that you secure the lugs only with the Cisco-provided screw or a Philips head screw of 10-32 x 0.37 inch. Secure the screws only while assembling the lugs.
- Crimping tool as specified by the ground lug manufacturer
- 6-AWG or larger copper wire for the ground wire
- Wire-stripping tools appropriate to the wire you are using

**Caution** Before making connections to the chassis, ensure that you disconnect the power at the circuit breaker. Otherwise, severe injury to you or damage to the chassis may occur.

**Caution** Electric Shock Hazard: This fan tray has to be serviced by trained personnel only.

**Warning** This equipment must be grounded. Never defeat the ground conductor or operate the equipment in the absence of a suitably installed ground conductor. Contact the appropriate electrical inspection authority or an electrician if you are uncertain that suitable grounding is available. Statement 1024

**Warning** Use copper conductors only. Statement 1025

**Warning** When installing the unit, the ground connection must always be made first and disconnected last. Statement 42

This unit is to be installed in a restrictive access location and must be permanently grounded to a minimum 6-AWG copper ground wire.

Perform the following procedure to ground the chassis using a 2-hole lug and the corresponding mounting point. Most carriers require a minimum 6-AWG ground connection. Verify your carrier's requirements for the ground connection.

**Procedure**

**Step 1** If your ground wire is insulated, use a wire-stripping tool to strip the ground wire to 0.5 inch ± 0.02 inch (12.7 mm ±0.5 mm).

***Figure 20: Stripping a Ground Wire***

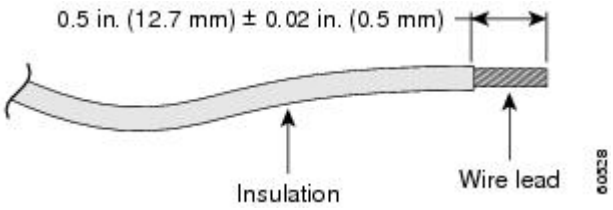


**Step 2** Slide the open end of your 2-hole ground lug over the exposed area of the ground wire.

**Step 3** Using a crimping tool (as specified by the ground lug manufacturer), crimp the ground lug to the ground wire as shown in Figure below.

***Figure 21: Crimping a Ground Lug on to the Ground Wire***

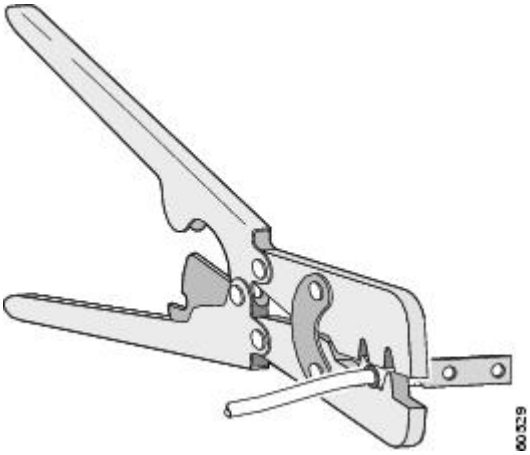


**Step 4** Use a Phillips head screwdriver to attach the 2-hole ground lug and wire assembly to the chassis with the 2 pan-head Phillips head screws.

**Step 5** Connect the other end of the ground wire to a suitable grounding point at your site.

# Installing and Removing the Fan Tray

This section describes how to install and remove fan trays.

# Installing the Fan Tray

Follow these steps to install the fan tray in the chassis:

**Caution** Electric Shock Hazard: This fan tray has to be serviced by trained personnel only.

**Caution** Always wear the ESD wrist strap when installing or uninstalling the fan tray.

**Caution** Unplug all power sources before performing this procedure.

### Procedure

**Step 1** Orient the fan tray so that the captive screws are aligned to the chassis cavity on the back panel. See below figure.

**Step 2** Push the fan assembly into the chassis until the power connector seats in the backplane and the captive installation screws make contact with the chassis.

**Step 3** Tighten the captive installation screws, using a flat-blade or number 2 Phillips-head screwdriver.

*Figure 22: Installing the Fan Tray in the Chassis*

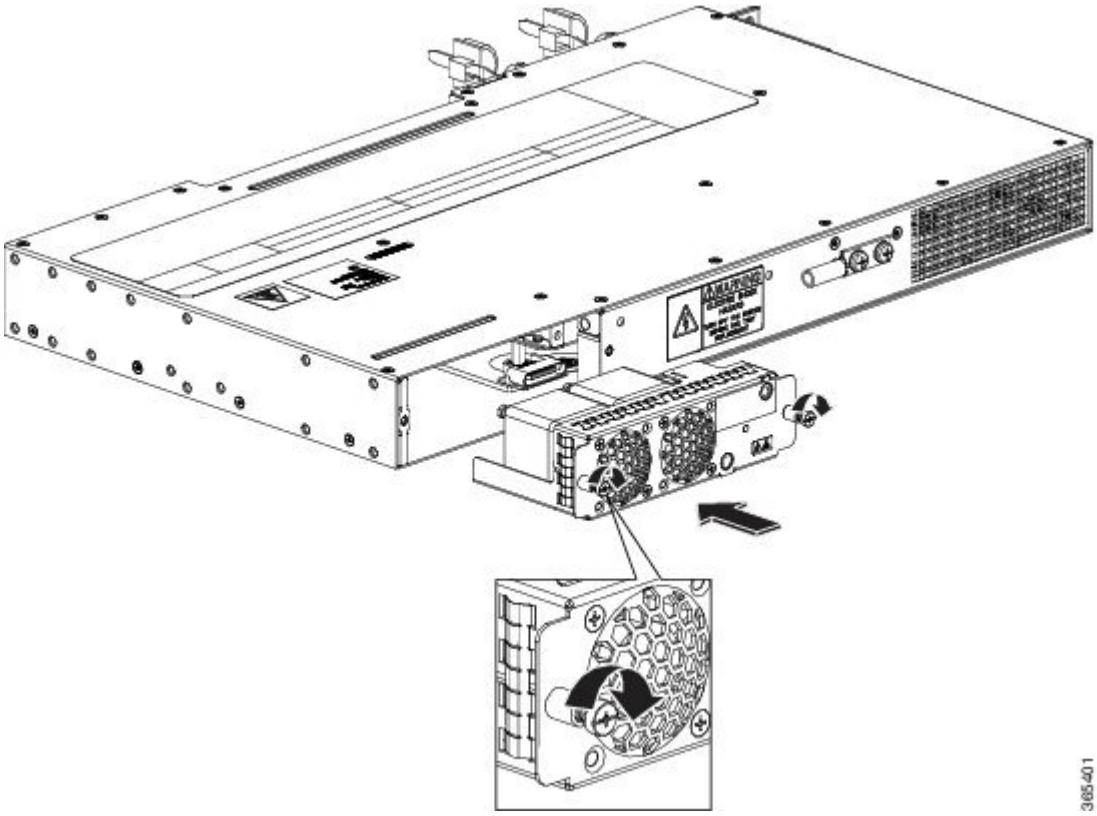


# Removing the Fan Tray

To remove the existing fan assembly, follow these steps:

**Caution** When removing the fan tray, keep your hands and fingers away from the spinning fan blades. Let the fan blades stop completely before you remove the fan tray.

**Caution** Unplug all power sources before performing this procedure.

**Caution** Always wear the ESD wrist strap when installing or uninstalling the fan tray.

### Procedure

**Step 1** Locate the fan assembly in the chassis. The fan tray is located to the left of the chassis on the rear side. See below figure.

**Step 2** Loosen the two fan tray captive installation screws by turning them counterclockwise, using a flat-blade or number 2 Phillips-head screwdriver.

**Step 3** Grasp the fan assembly with both hands, and pull it outward; rock it gently, if necessary, to unseat the fan assembly power connector from the backplane.

**Step 4** Pull the fan assembly clear of the chassis, and set it aside.

*Figure 23: Uninstalling the Fan Tray from the Chassis*

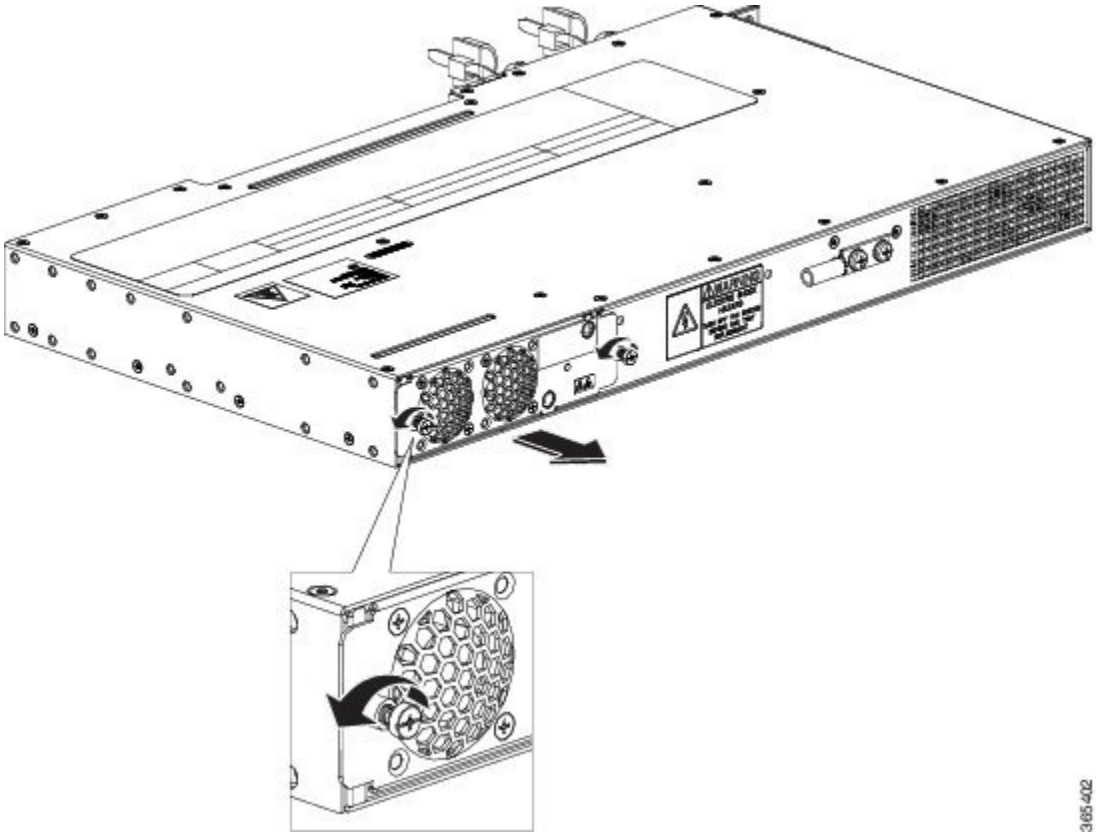


# Interface Module Installation

The following sections describe the various tasks of associated with interface module installation:

# Installing an Interface Module

**Caution** Before inserting an interface module, make sure that the chassis is grounded.

**Procedure**

**Step 1** To insert the interface module, carefully align the edges of the interface module between the upper and lower edges of the chassis slot.

**Step 2** Carefully slide the interface module into the chassis slot until the interface module makes contact with the backplane.

**Step 3** Tighten the locking thumbscrews on both sides of the interface module. The recommended maximum torque is 5.5 in.-lb (.62 N-m).

**Step 4** Connect all the cables to each interface module.

# Removing an Interface Module

**Procedure**

**Step 1** To remove an interface module, disconnect all the cables from the interface module.

**Step 2** Loosen the locking thumbscrews on both sides of the interface module.

**Step 3** Slide the interface module out of the chassis slot by pulling on the handles. If you are removing a blank filler plate, pull the blank filler plate completely out of the chassis slot using the captive screws.

# Installing Patch Panel

To install the brackets on the rear of the patch panel, perform these steps:

**Procedure**

**Step 1** Remove the larger (M4) rack mount screws (as indicated in the *Rack Mount Screws* figure below) from both sides. To secure the brackets, follow the instructions in Step-3.

**Step 2** Remove the patch panel rack-mount brackets from the accessory kit and position them beside the patch panel.

**Step 3** Position the brackets against the patch panel sides, and align with the screw holes. Secure the rack mount bracket to patch panel using a torque of 13.2 in.-lb (1.5 N-m) see the figure below.

*Figure 24: Rack Mount Screws*

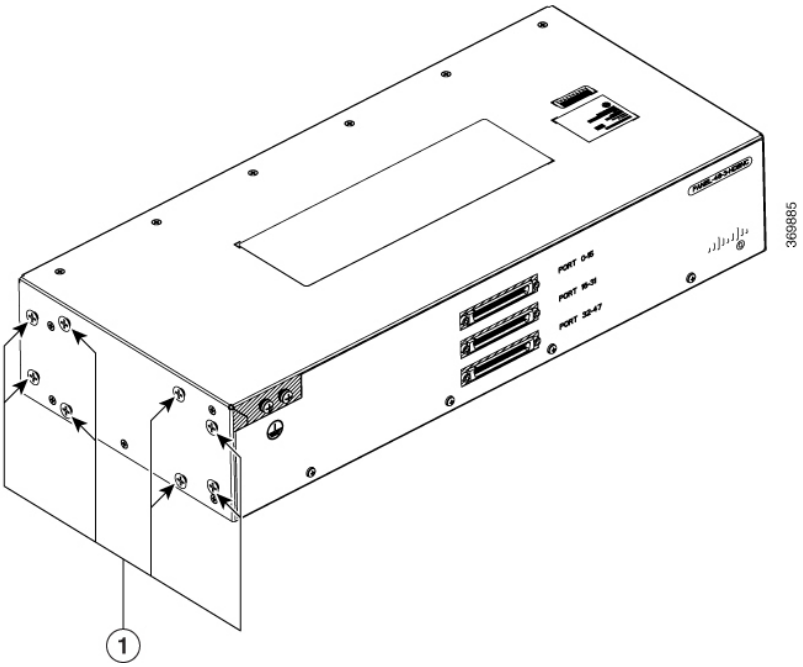


(1) Rack mount screws to secure rack mount brackets on both the sides.

*Figure 25: Patch Panel Front View with Brackets*

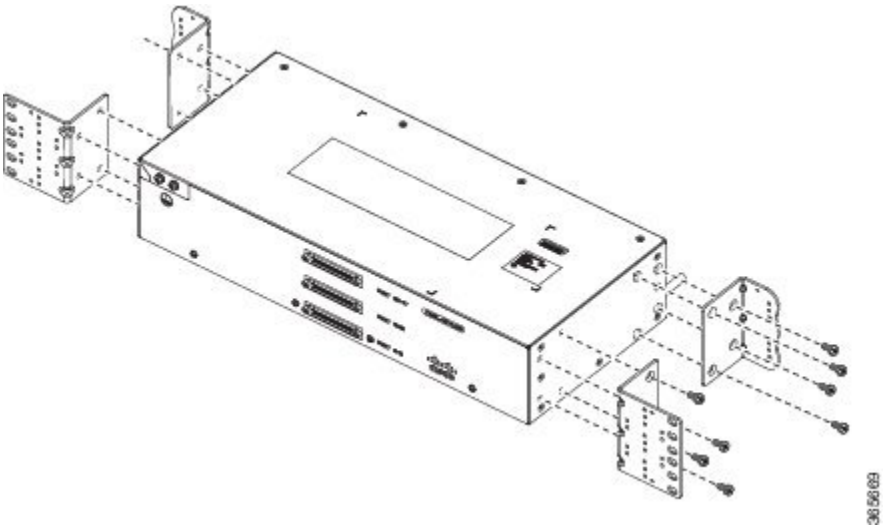


**Step 4** Position the cable management guides against the mounting brackets on the patch panel, see the figure below.

*Figure 26: Patch Panel Front View with Brackets and Guides*

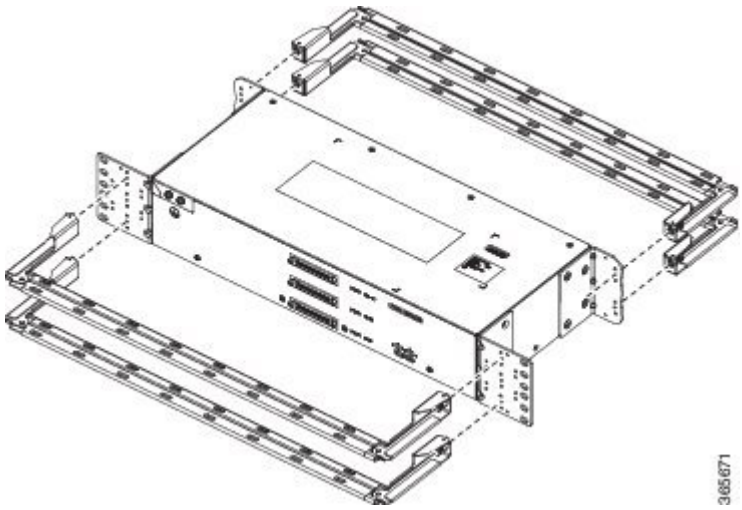


*Figure 27: Patch Panel Rear View with Brackets and Guides*

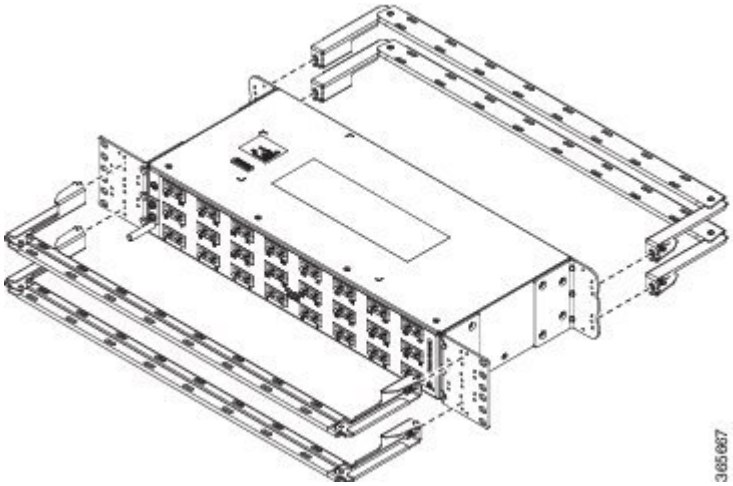


**Step 5** Secure the guides to the brackets with the screws. The recommended maximum torque is 28 in.-lb (3.16 N-m).

**Step 6** **Note**

Cable brackets should be assembled according to the PID used as different PIDs have different set and quantity of brackets. Refer figures 110 to 115 for PID and cable bracket details.

Position the patch panel with brackets and guide onto the rack and secure with screws provided. The recommended maximum torque is 28 in.-lb (3.16 N-m), see the figure below.

*Figure 28: Patch Panel Front View with Brackets and Guides Installed on Rack*

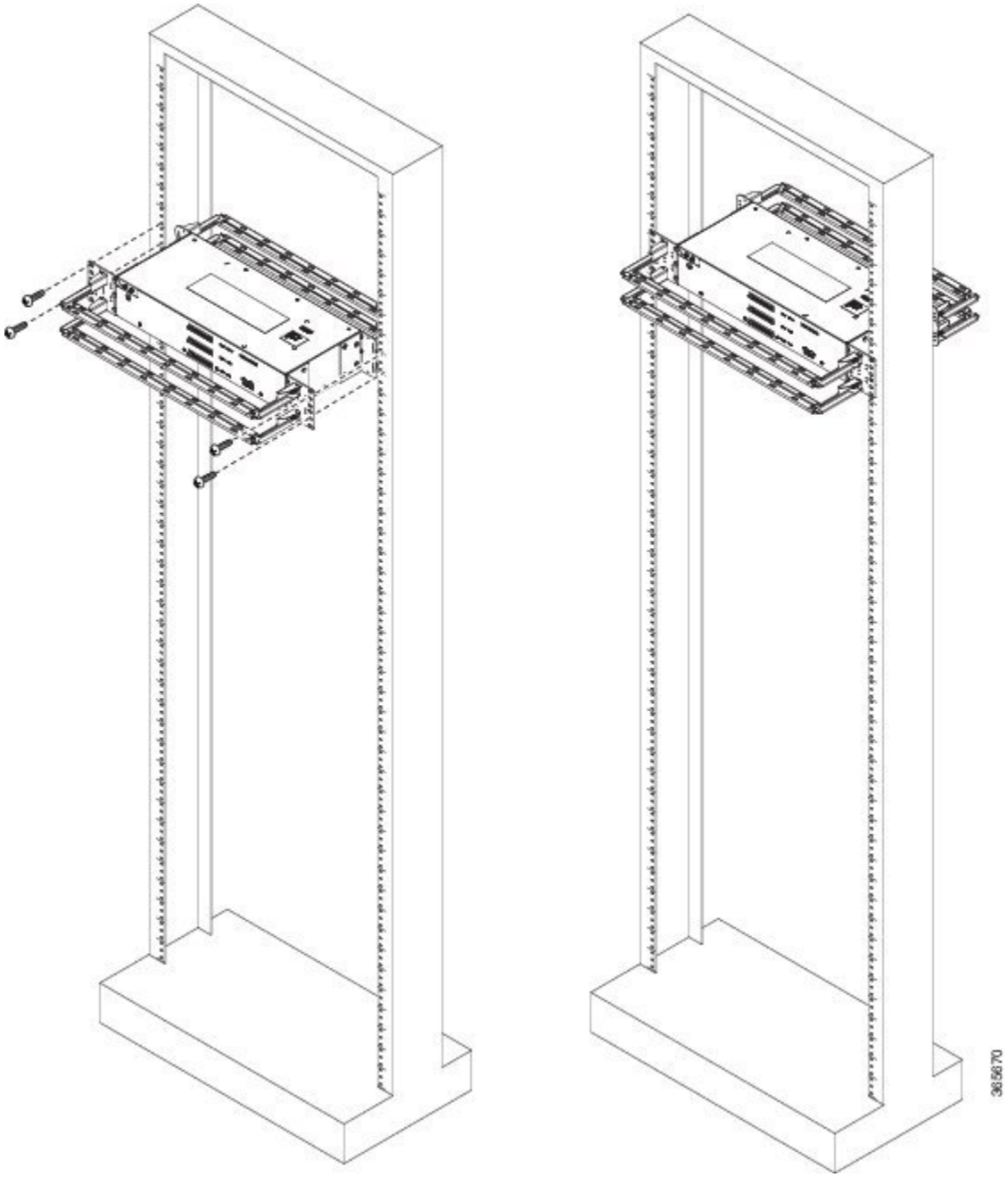

*Figure 29: Patch Panel Rear View with Brackets and Guides Installed on Rack*

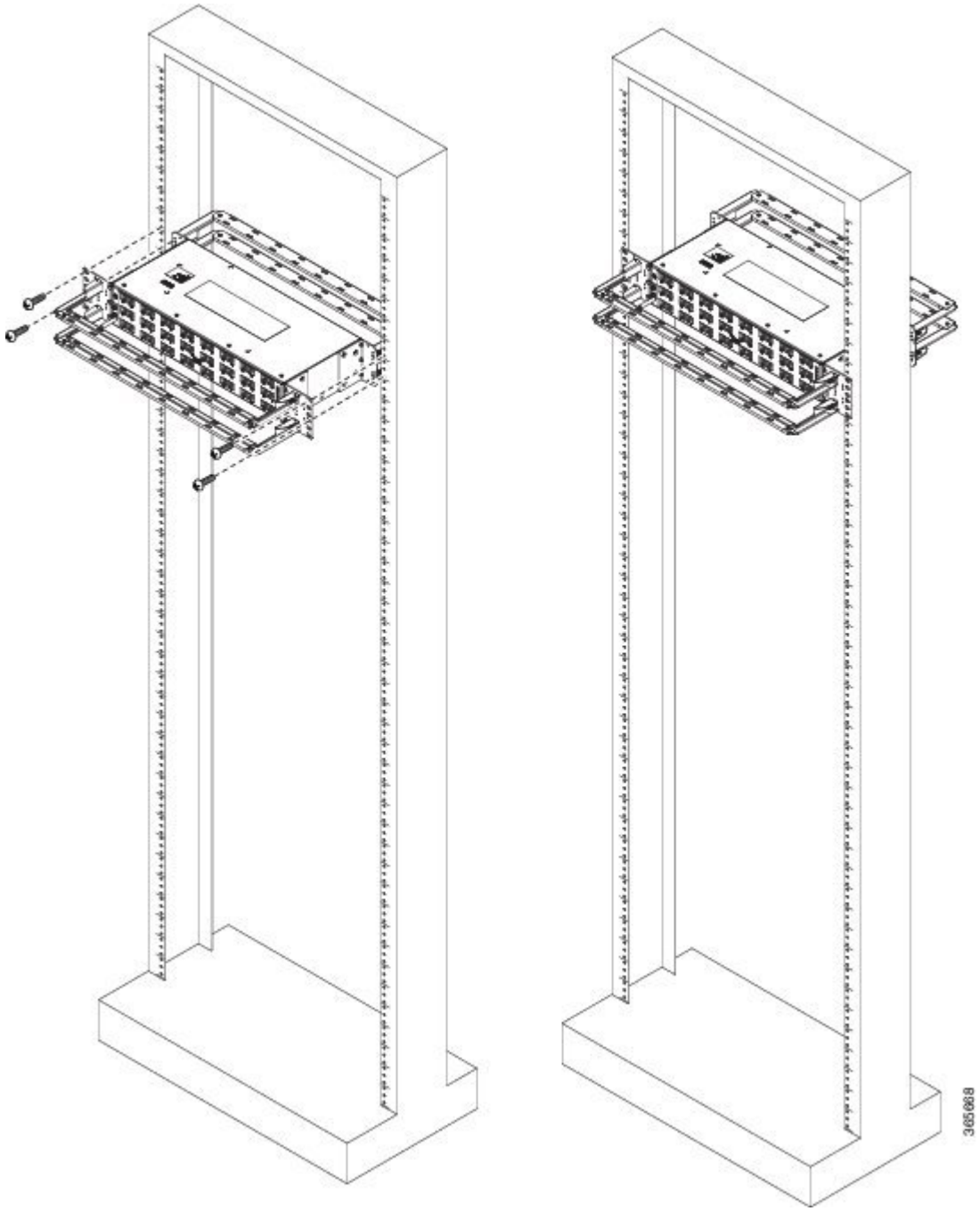

*Figure 30: PANEL-16-DIN Patch Panel Mounting Installed on Rack*

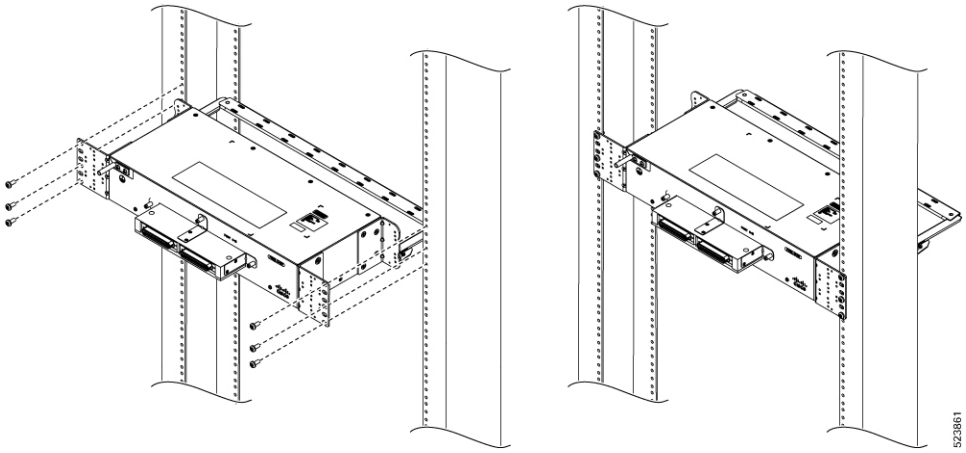


*Figure 31: PANEL-48-1-AMP64*

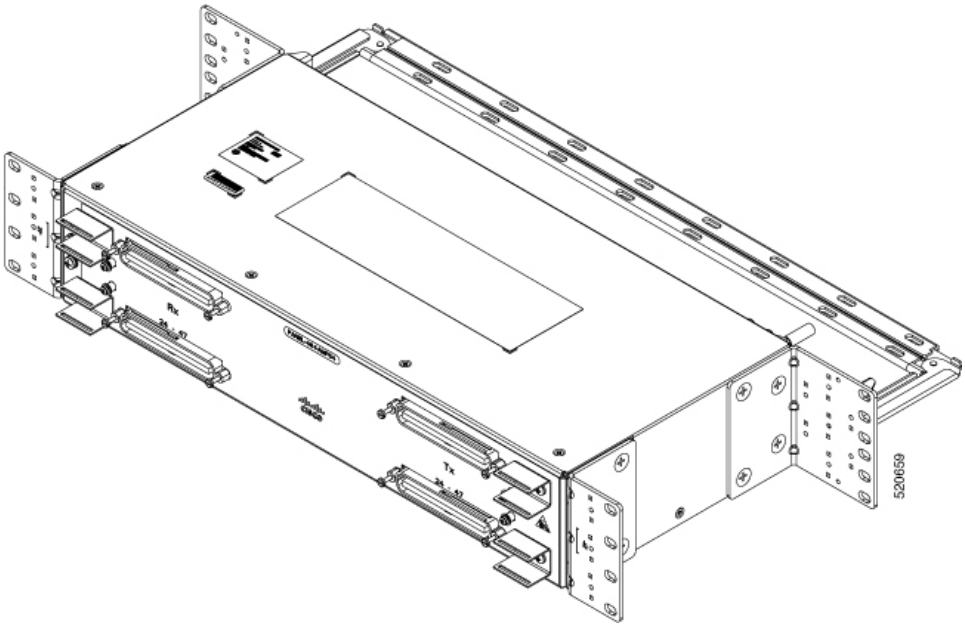

*Figure 32: PANEL-48-1-DIN*

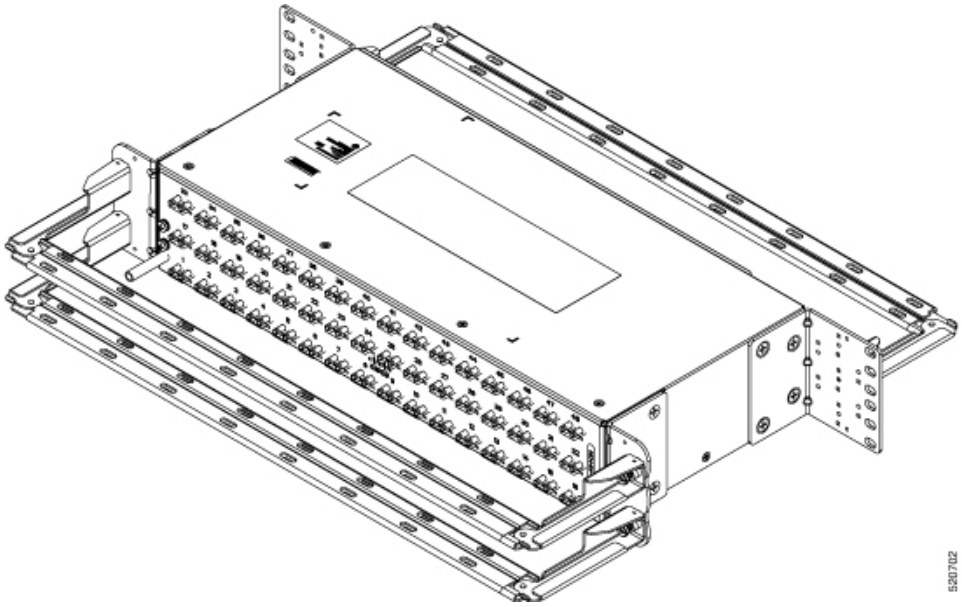


*Figure 33: PANEL-48-1-RJ48*

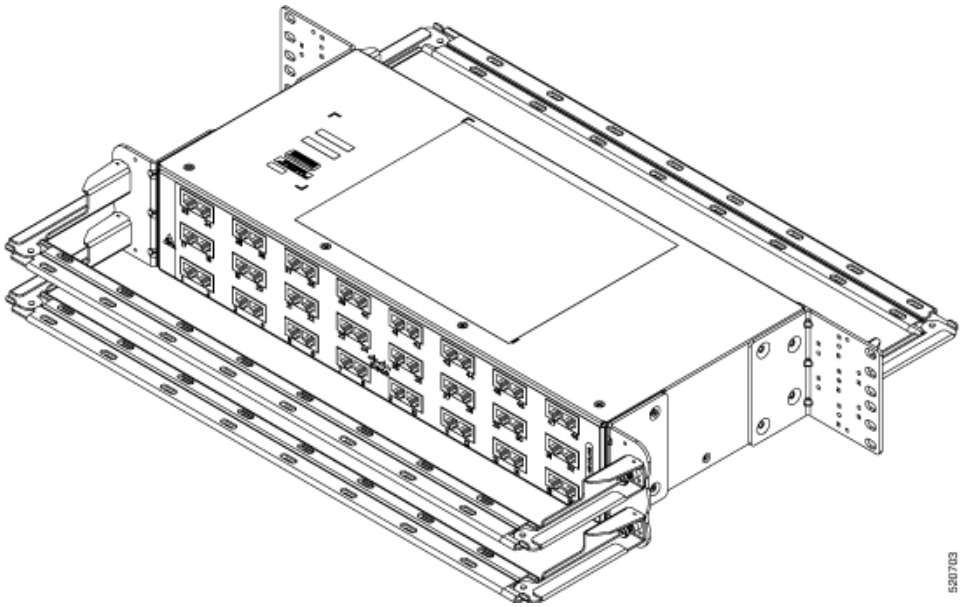

*Figure 34: PANEL-48-3-DIN*

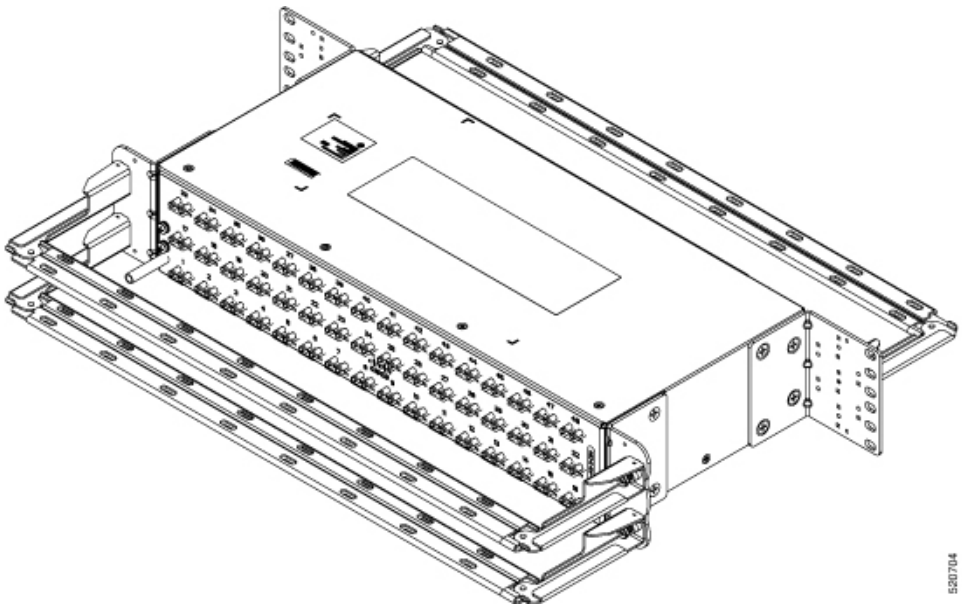


**Note**

The installation of PANEL-48-1-AMP64, PANEL-48-1-DIN, PANEL-48-1-RJ48, and PANEL-48-3-DIN is similar to the installation steps mentioned above.

*Figure 35: PANEL-48-3-HDBNC*

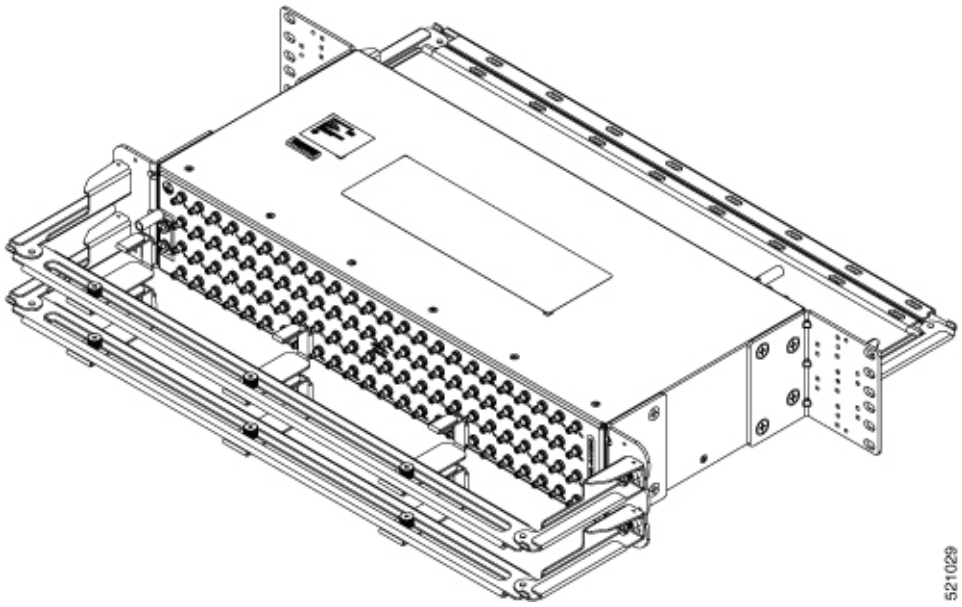

*Figure 36: PANEL-144-1-AMP64*

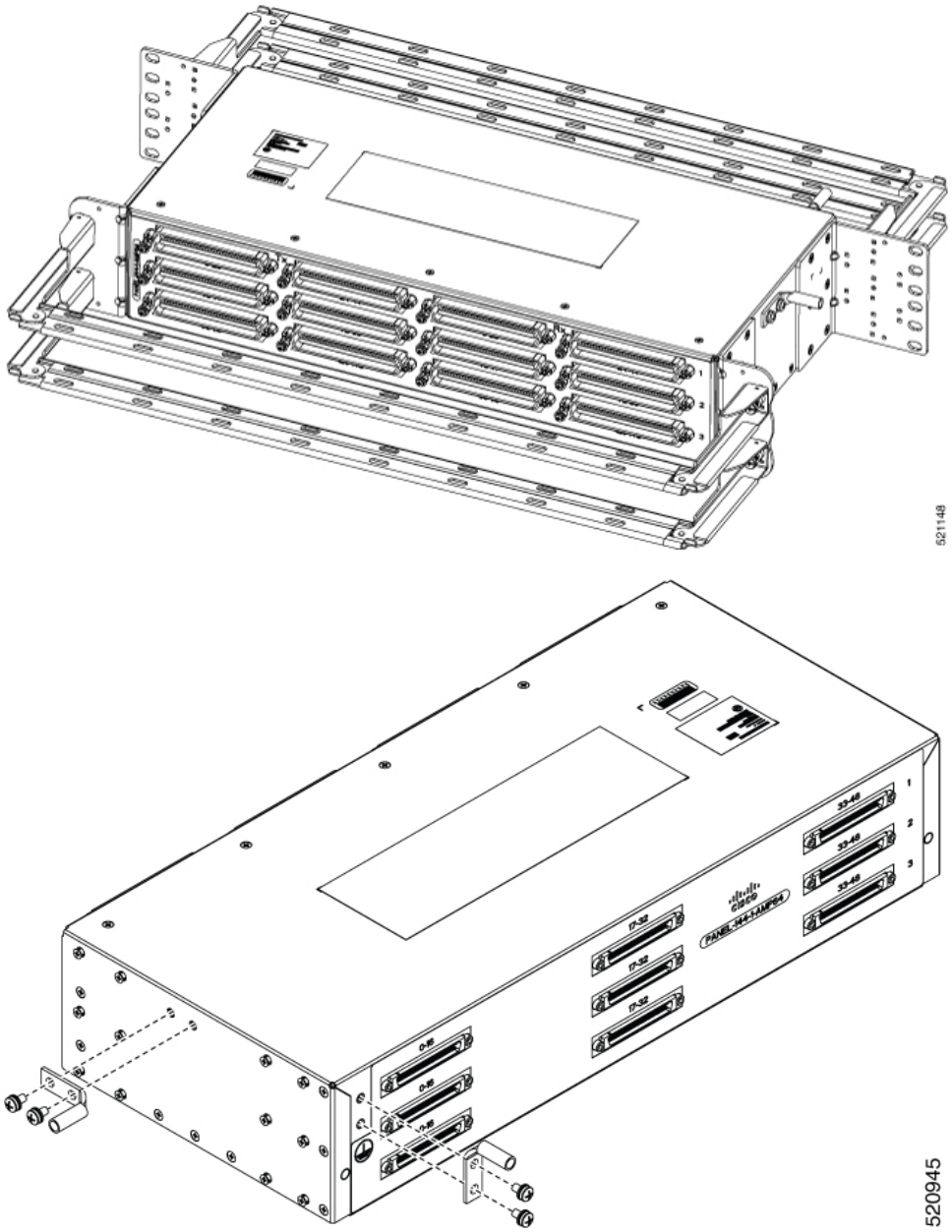

*Figure 37: Example of 120° Exit Cable Hood*

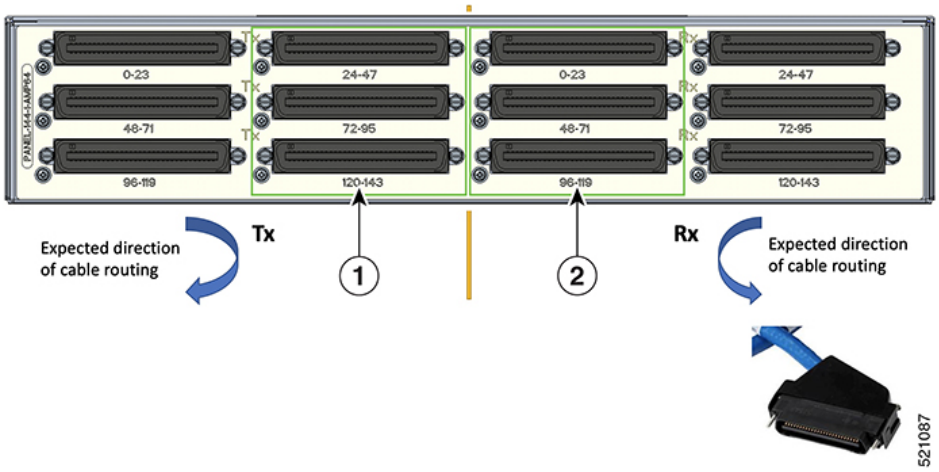


The following table shows details of the 120° exit cable hood:

*Table 13: Cable Routing Recommendation for Panel-144-1-AMP64*

| | |
|---|---|
| 1 | 120° exit cable hood with left routing should be used for centre ports on the Tx side. |
| 2 | 120° exit cable hood with right routing should be used for centre ports on the Rx side. |

# Install 3G Patch Panel

You can choose to either set up the Cisco ASR 903 3G patch panel on a rack or wall mount it.

## Install Rack Brackets

### Procedure

**Step 1** Connect the grounding lugs using a crimping tool (as specified by the ground lug manufacturer), crimp the ground lug to the ground wire.

**Step 2** Use a 6 AWG ground wire to connect the other end to a suitable grounding point at your site.

*Figure 38: Patch Panel Grounding - Single*

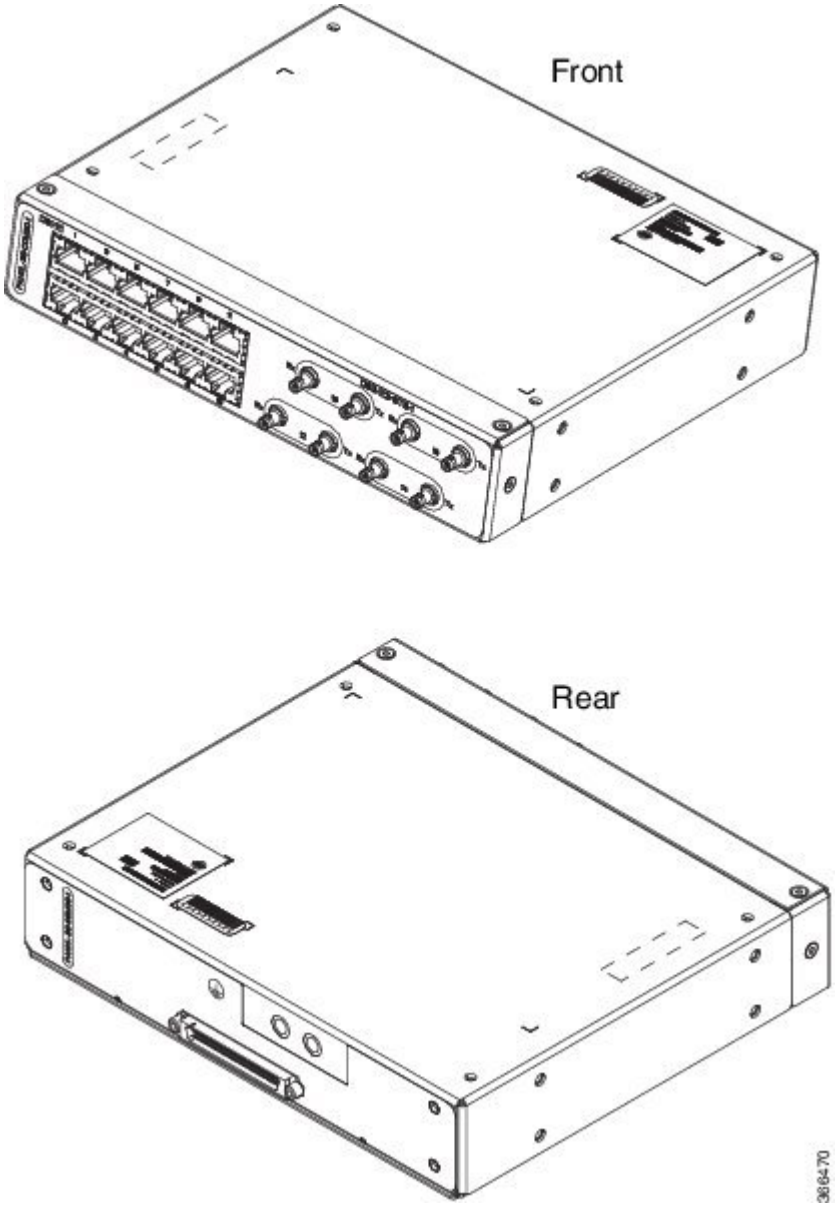

*Figure 39: Patch Panel Grounding - Dual*

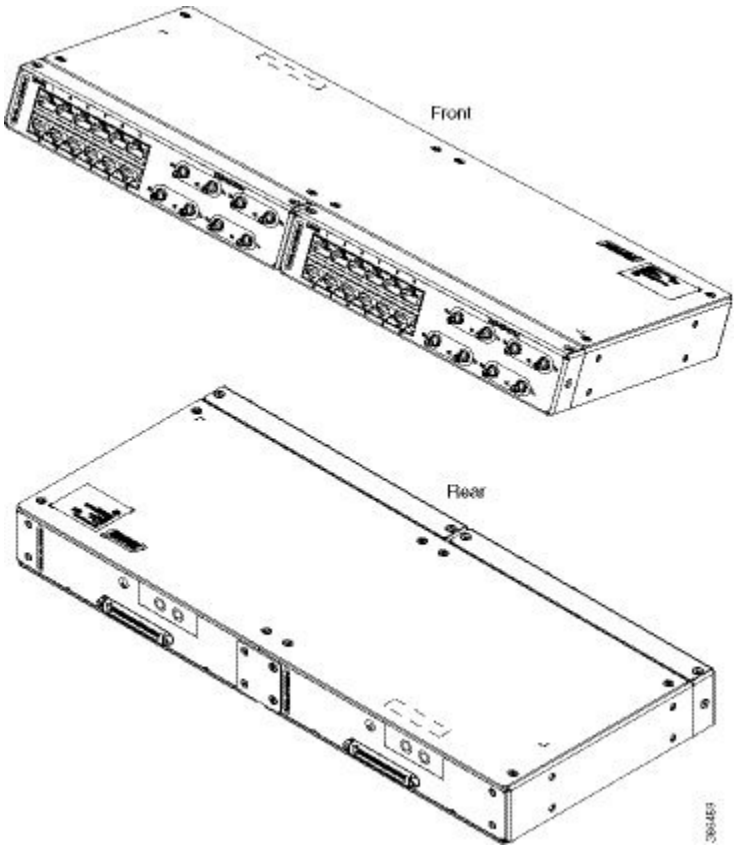


**Step 3** Position the patch panel in the rack as follows:

- If the front of the patch panel is at the front of the rack, insert the rear of the chassis between the mounting posts.
- If the rear of the patch panel is at the front of the rack, insert the front of the chassis between the mounting posts.

**Step 4** Align the mounting holes in the bracket with the mounting holes in the equipment rack.

*Figure 40: Installing the Patch Panel - Single in a 19-inch Rack*

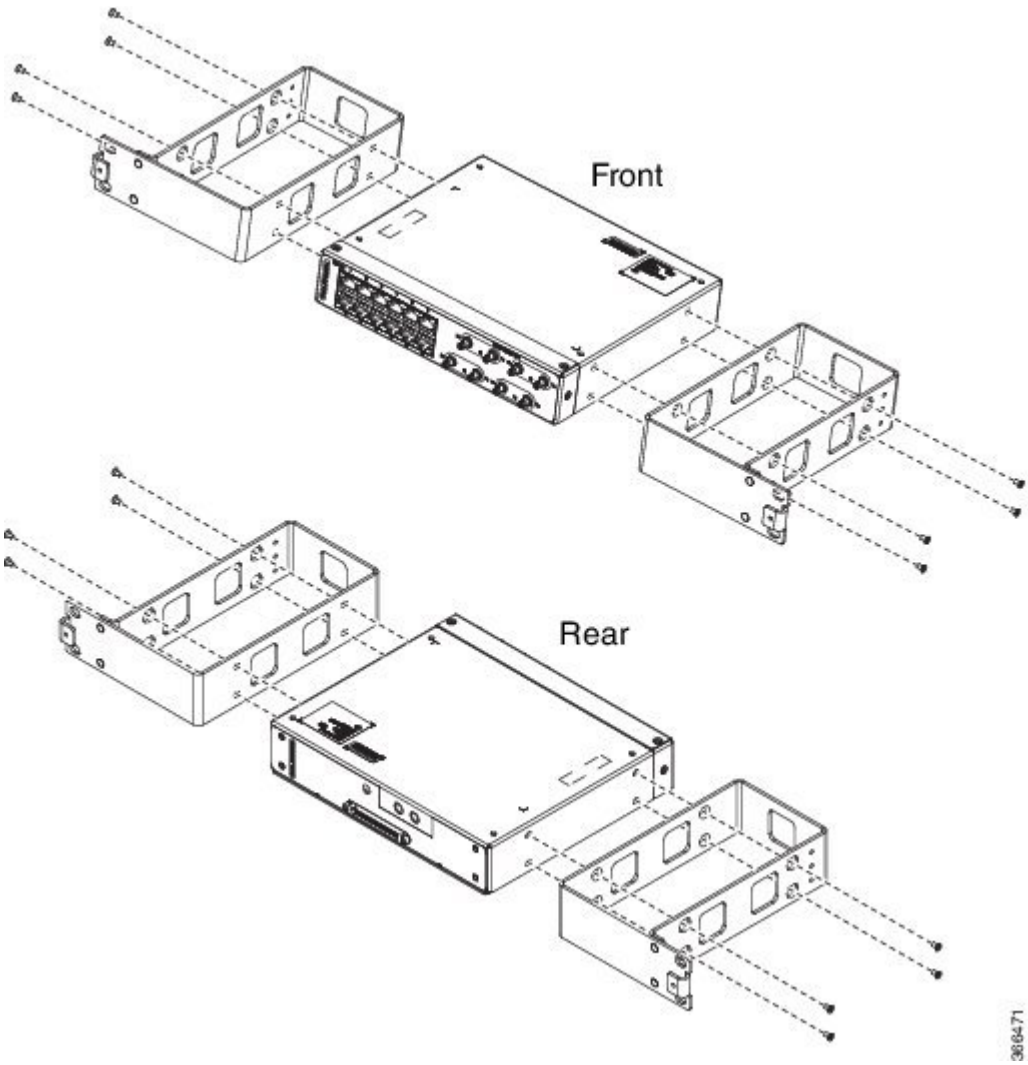

*Figure 41: Installing the Patch Panel - Dual in a 19-inch Rack*

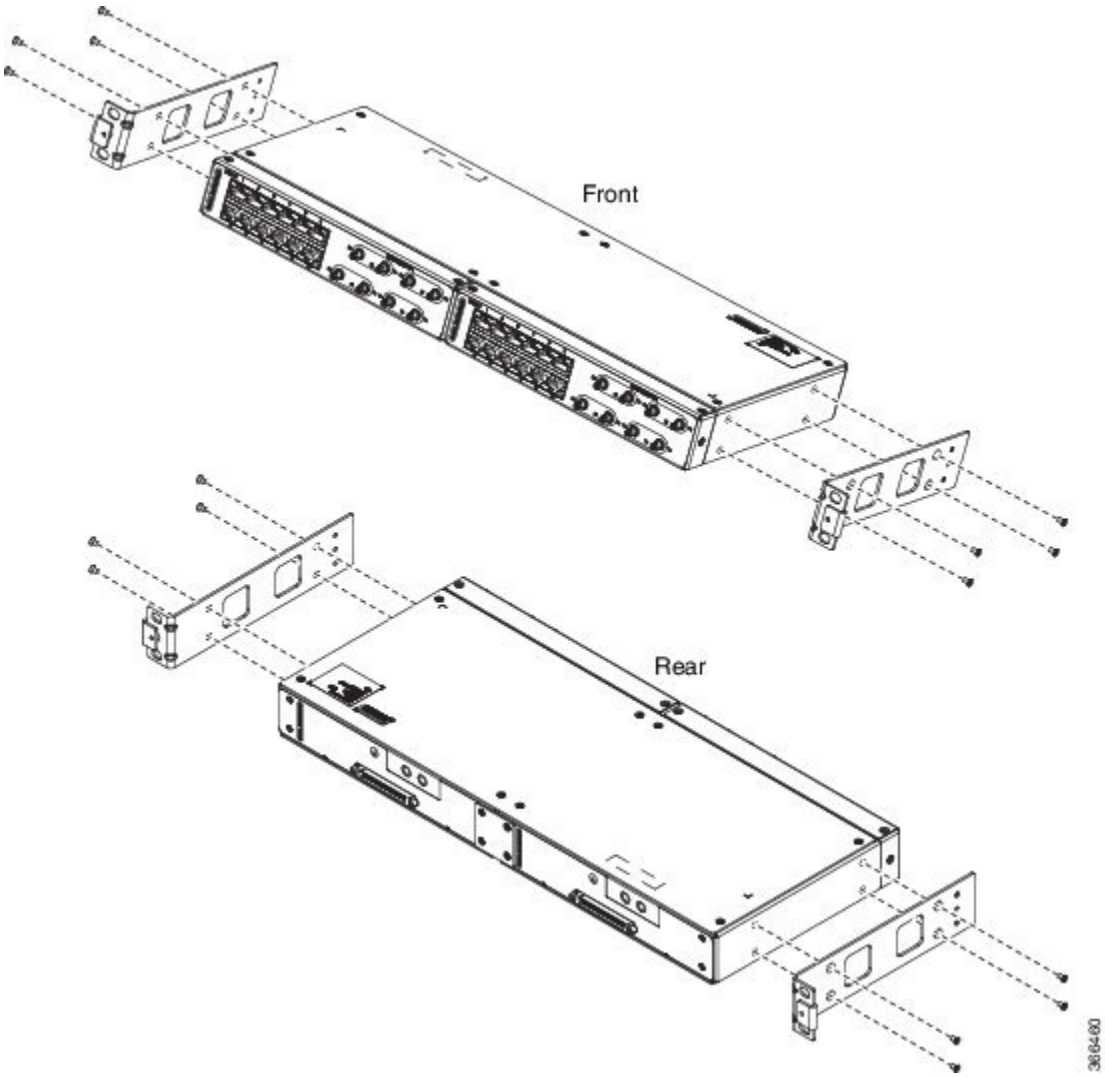

*Figure 42: Installing the Patch Panel - Single in a 21-inch Rack*

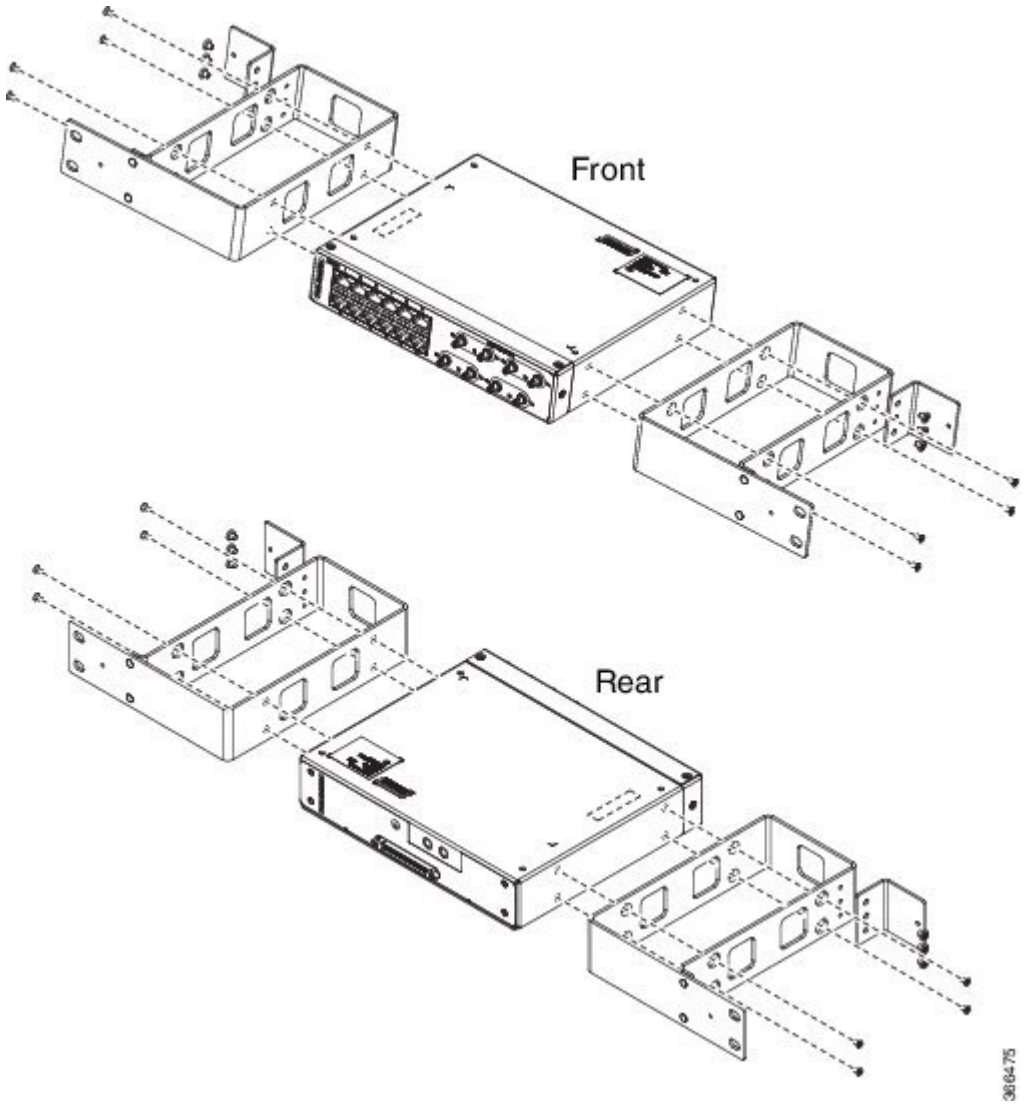

*Figure 43: Installing the Patch Panel - Dual in a 21-inch Rack*

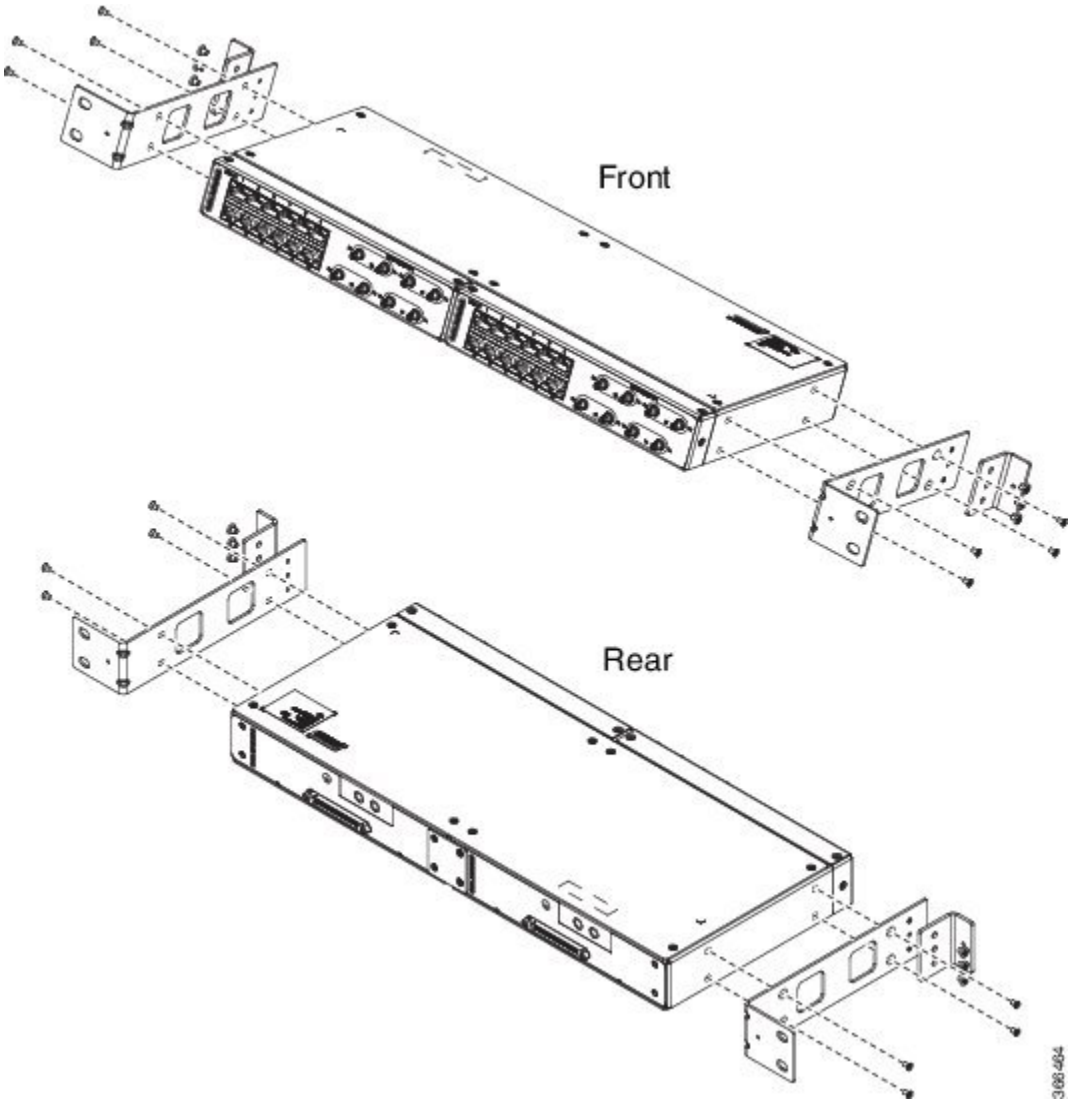

*Figure 44: Installing the Patch Panel - Single in a 23-inch Rack*

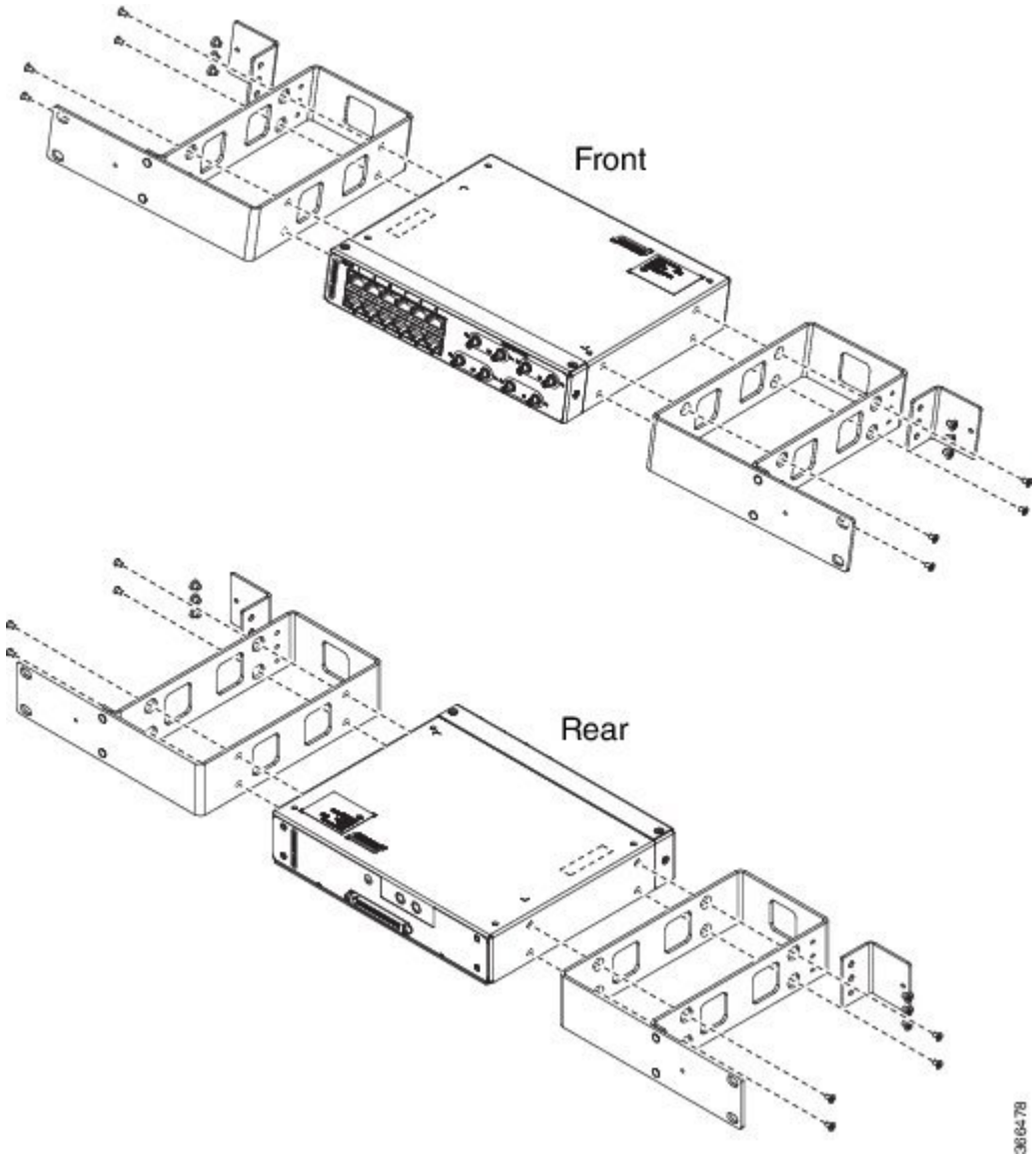

*Figure 45: Installing the Patch Panel - Dual in a 23-inch Rack*

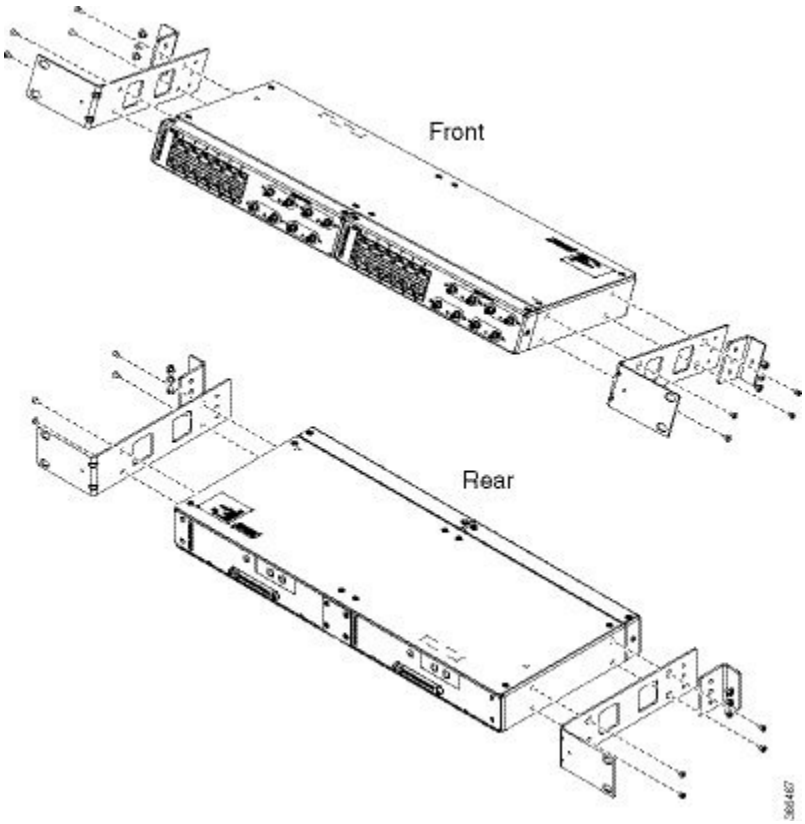


**Step 5** Secure the brackets to the chassis with the screws. The recommended maximum torque is 28 in.-lb (3.16 N-m).

- EIA 19 and 23 inches mounting brackets for both single and double 3G interface module patch panels.
- ETSI 21 inches mounting brackets for both single and double 3G interface module patch panels.

# Set up 3G Patch Panel on Rack

To install the optional cable management brackets, perform these steps:

**Procedure**

**Step 1** Position the cable management brackets against the front of the chassis and align the screw holes, as shown in the figure.

**Step 2** Secure the cable management brackets with the screws. The recommended maximum torque is 10 in.-lb (1.12 N-m).

*Figure 46: Attaching 19-inch Brackets to Patch Panel - Single*

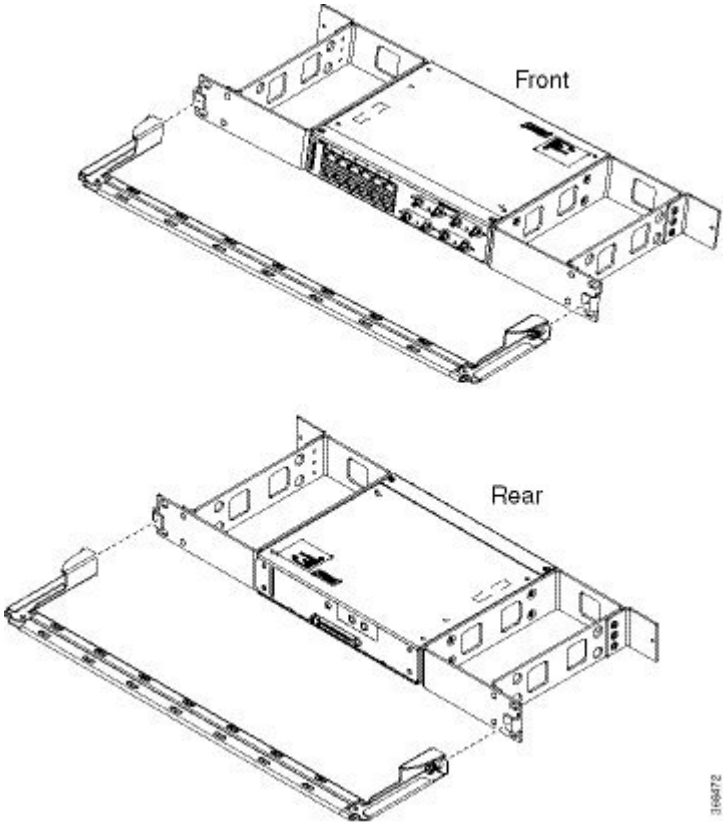

*Figure 47: Installing 19-inch Brackets on to Rack - Single*

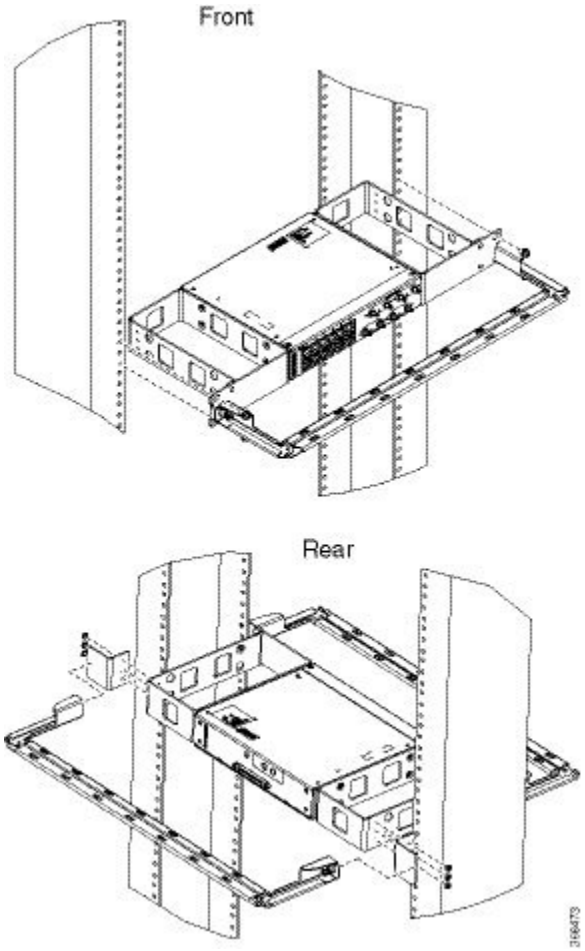

*Figure 48: Attaching 19-inch Brackets to Patch Panel - Dual*

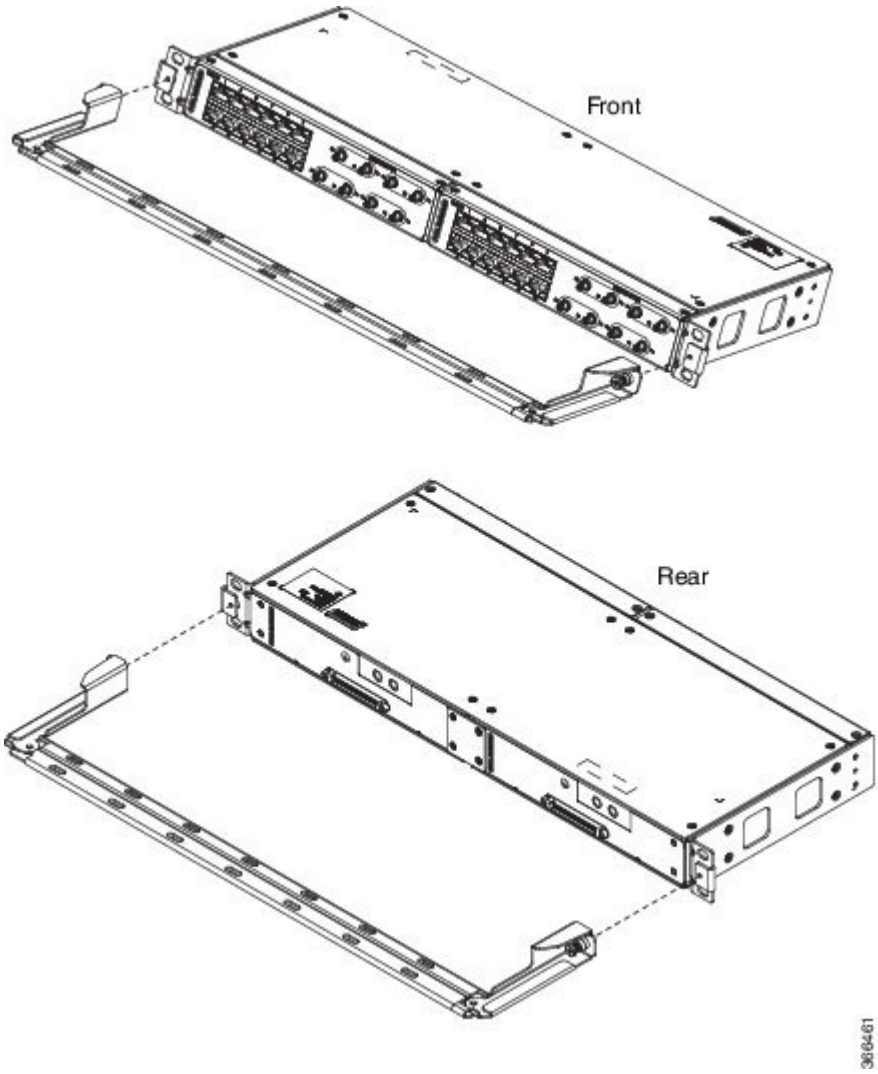

*Figure 49: Installing 19-inch Brackets on to Rack - Dual*

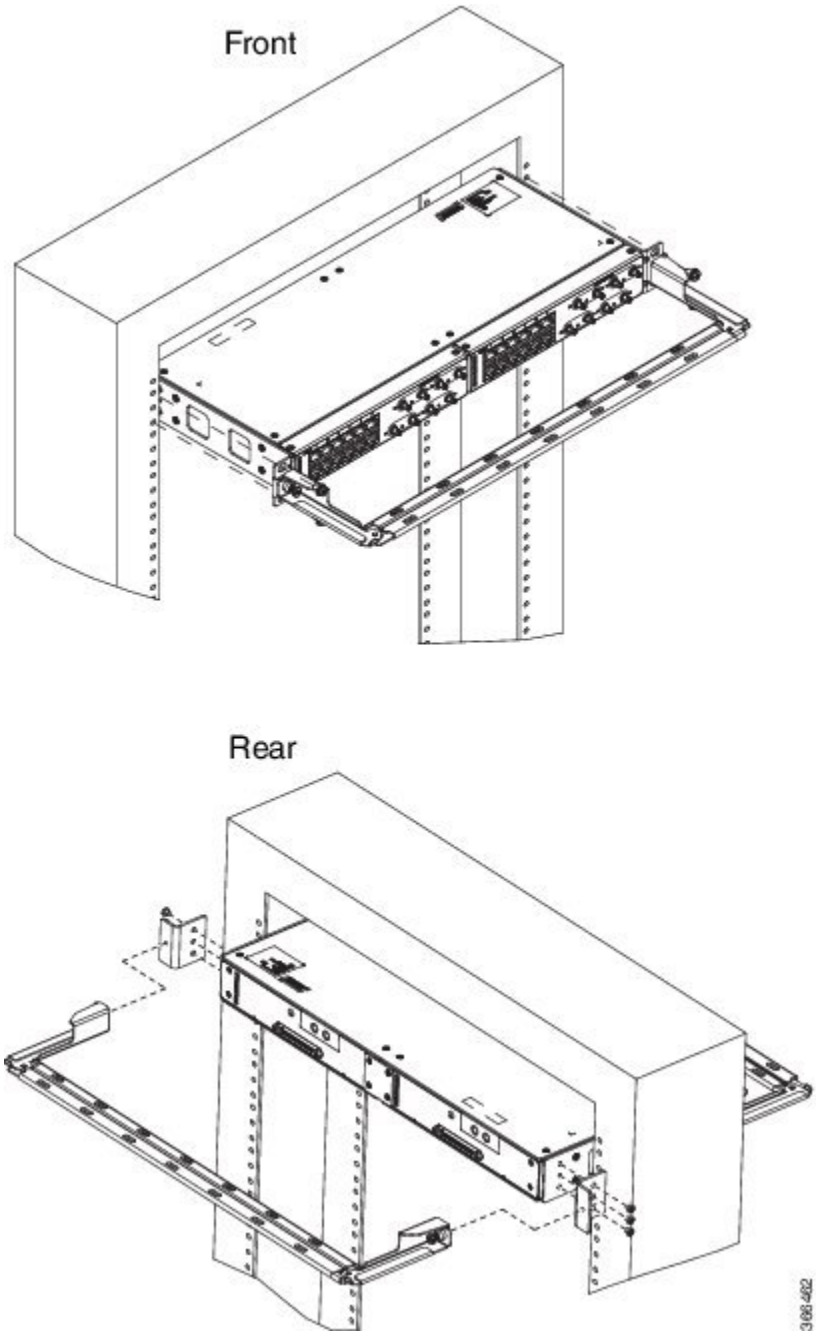

*Figure 50: Attaching 21-inch Brackets to Patch Panel - Single*

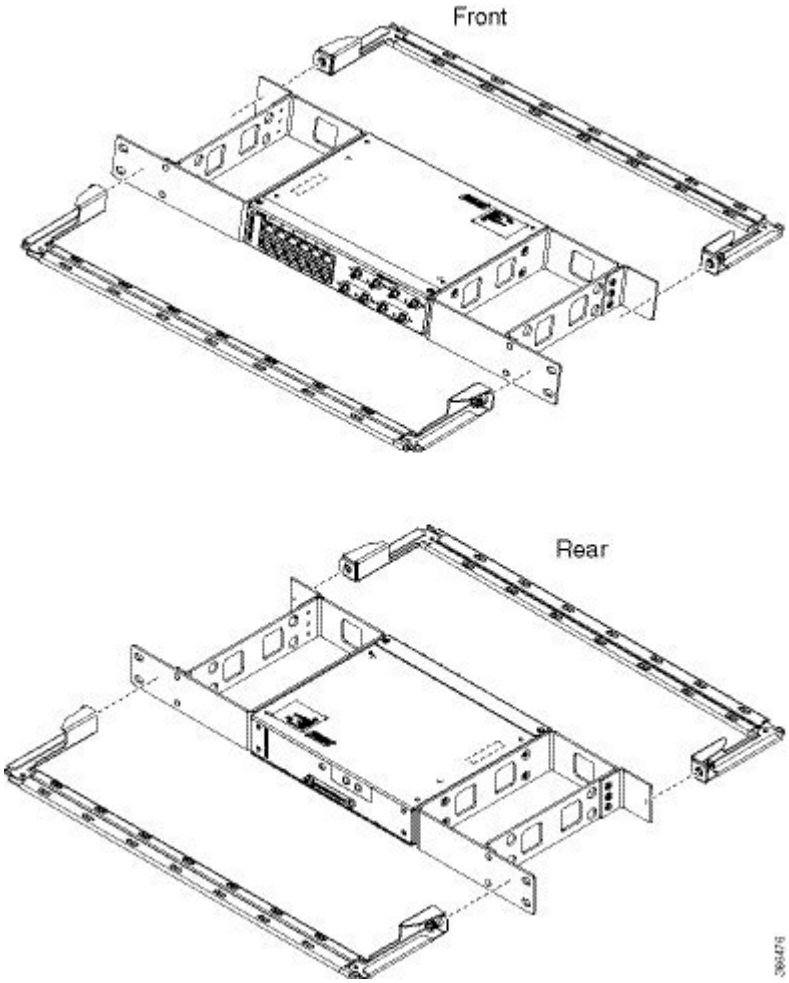

*Figure 51: Installing 21-inch Brackets on to Rack - Single*

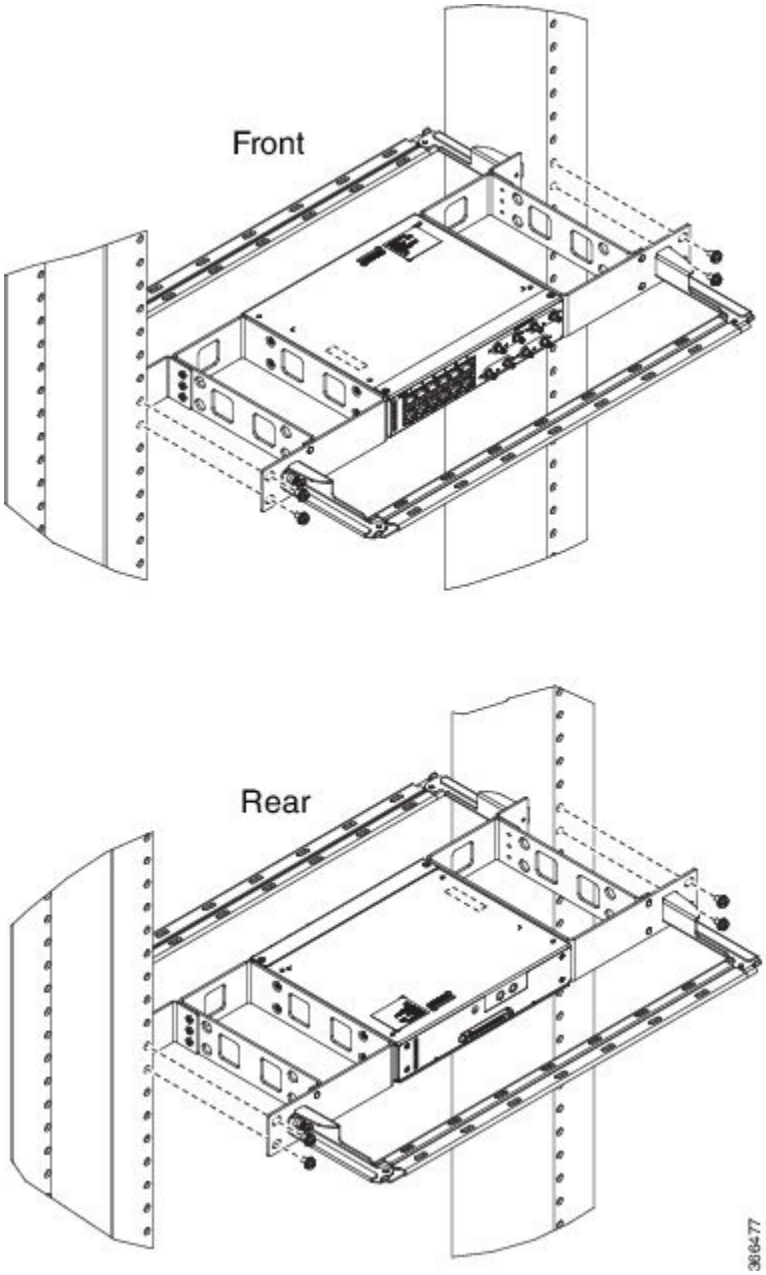

*Figure 52: Attaching 21-inch Brackets to Patch Panel - Dual*

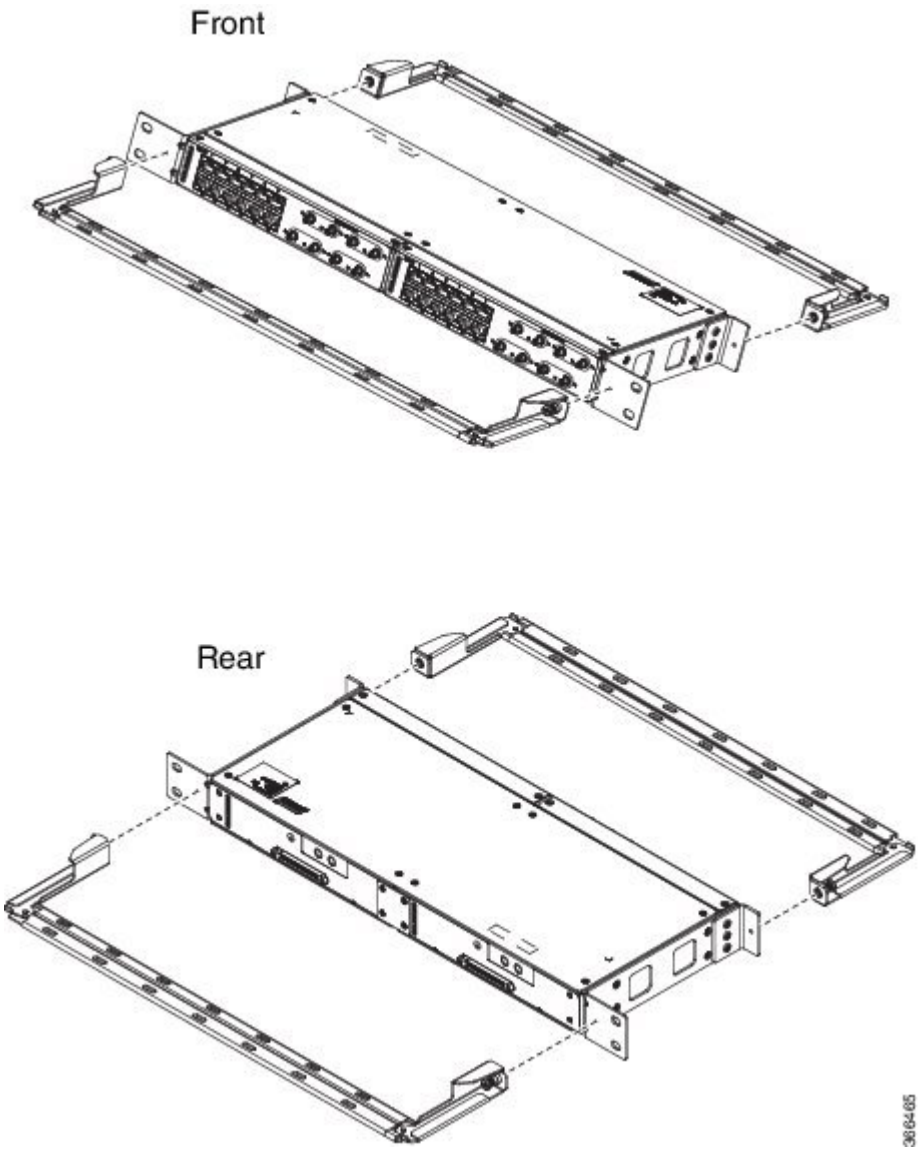

*Figure 53: Installing 21-inch Brackets on to Rack - Dual*

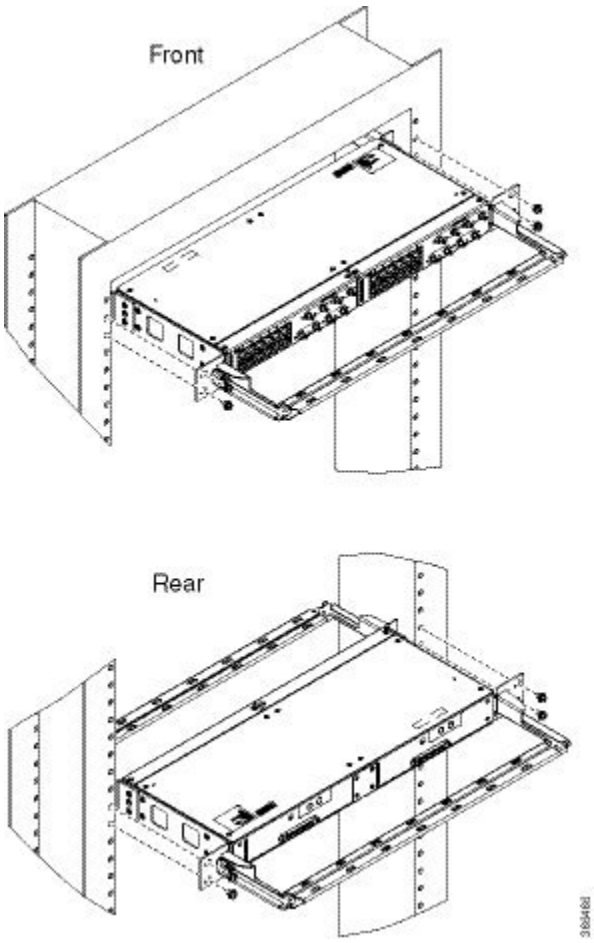

*Figure 54: Attaching 23-inch Brackets to Patch Panel - Single*

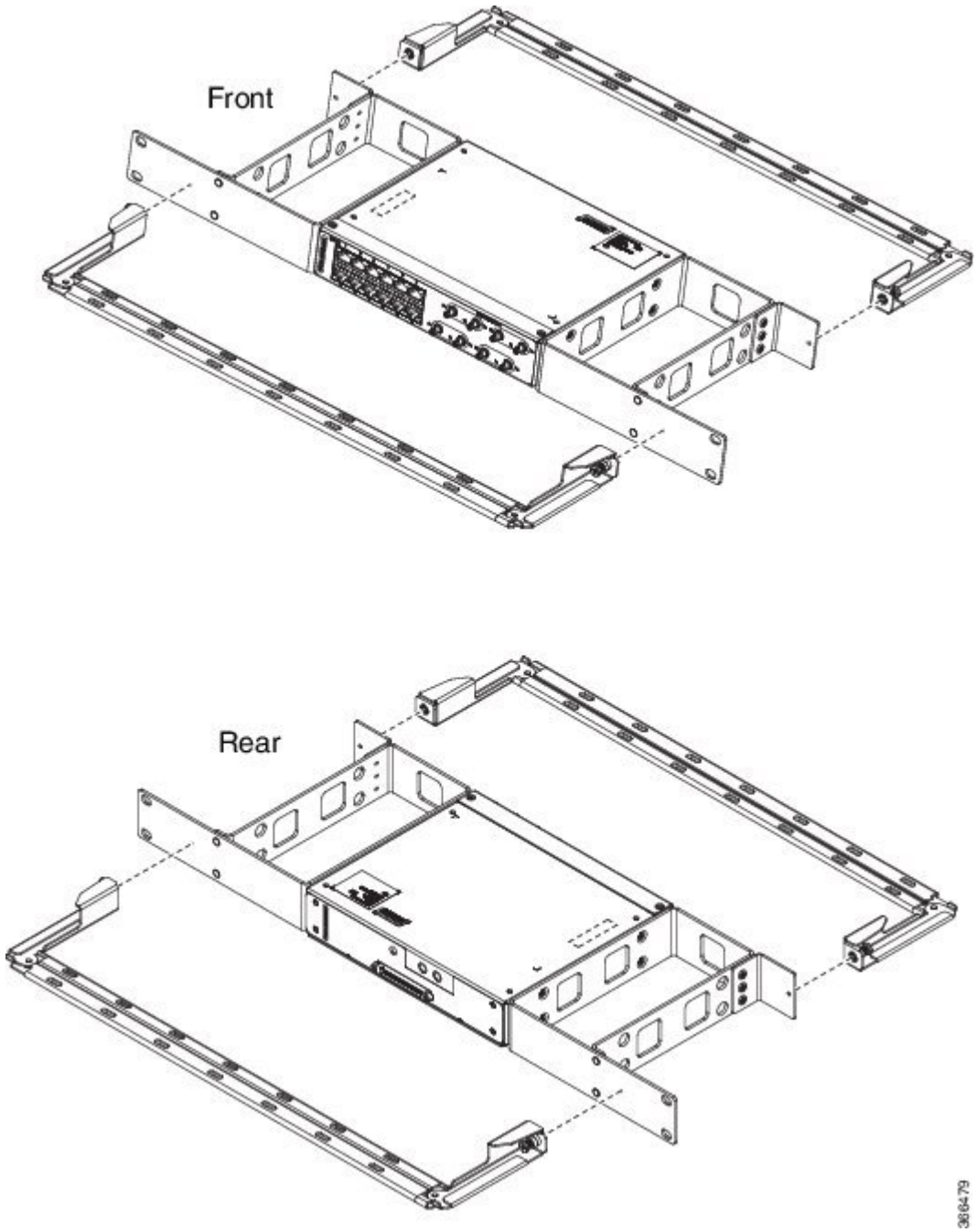

*Figure 55: Installing 23-inch Brackets on to Rack - Single*

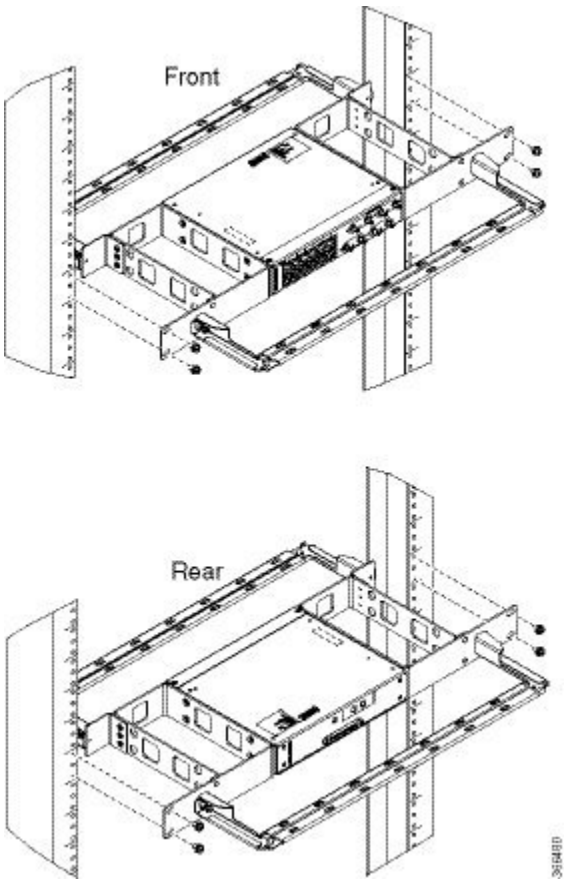

*Figure 56: Attaching 23-inch Brackets to Patch Panel - Dual*

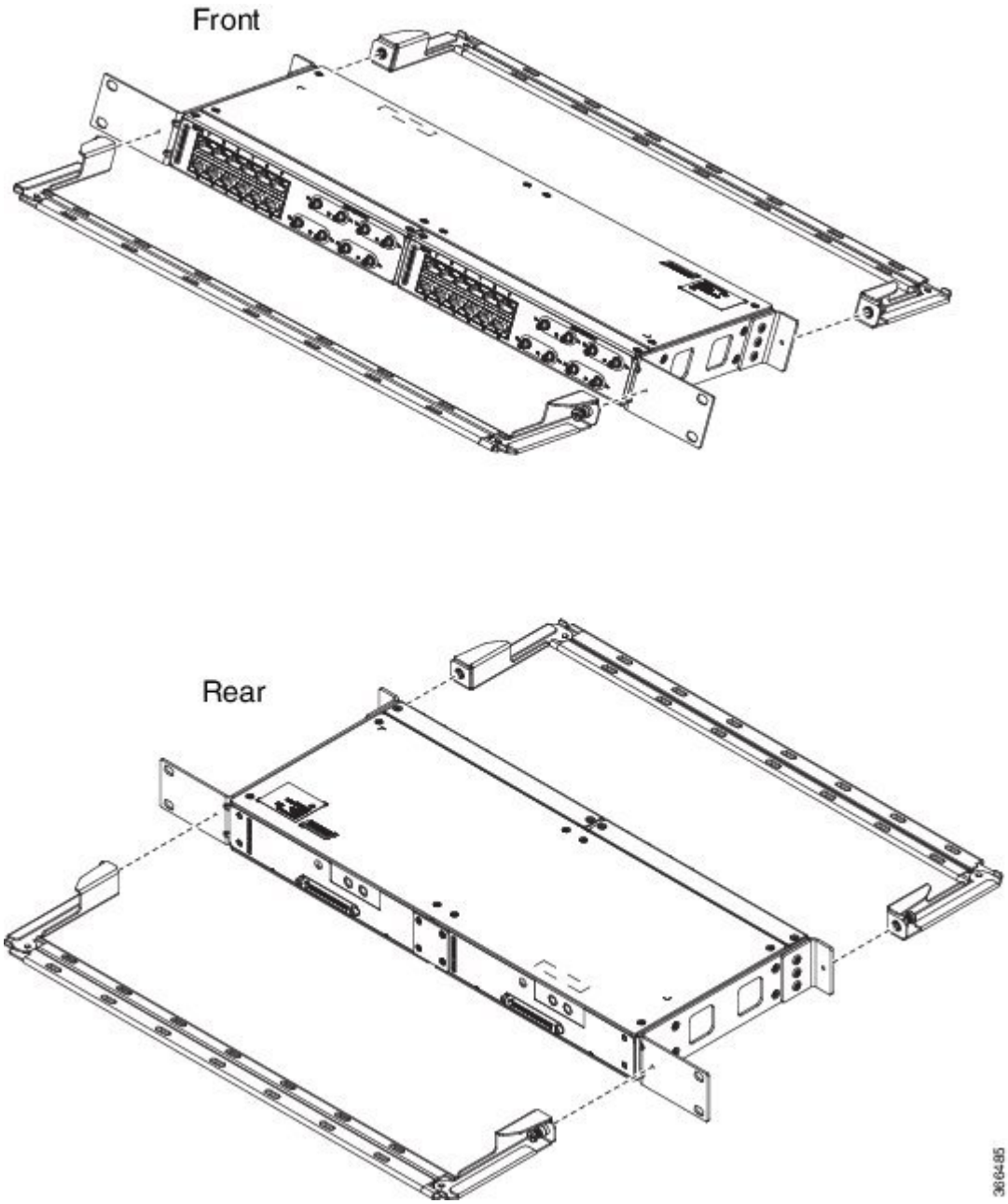

*Figure 57: Installing 23-inch Brackets on to Rack - Dual*

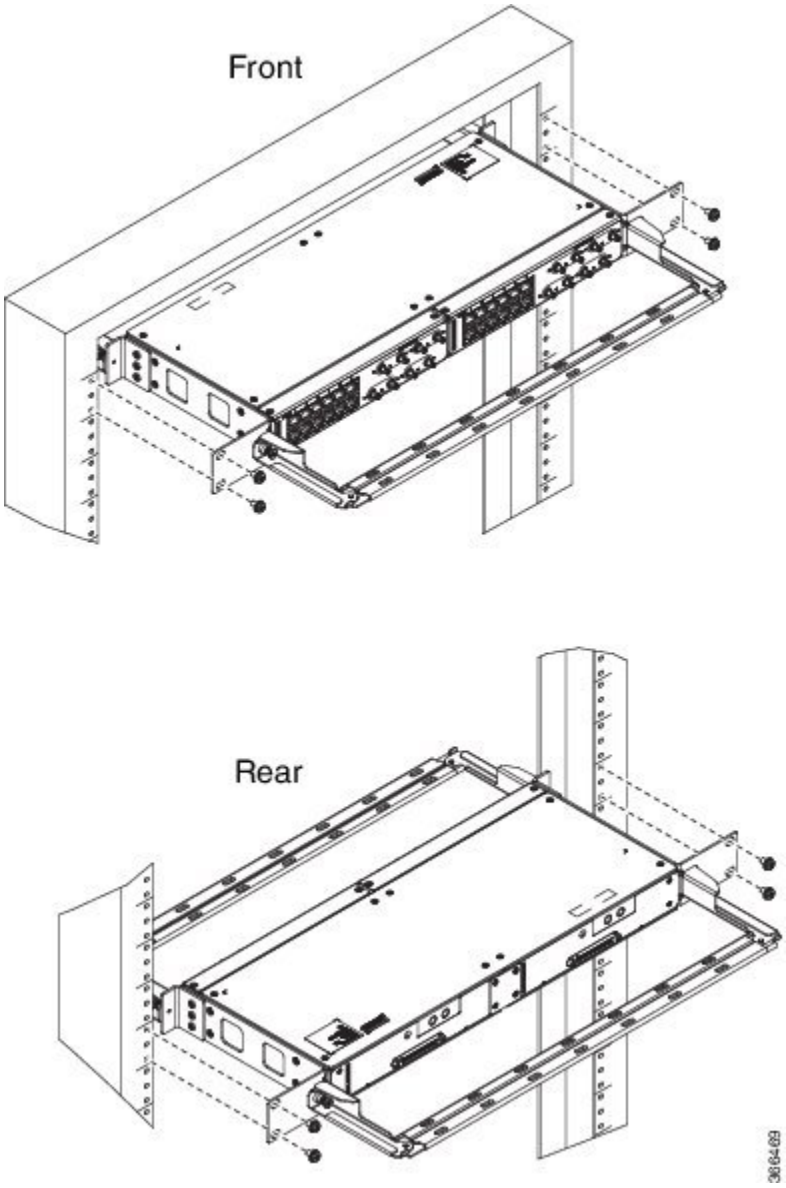


# Wall Mount 3G Patch Panel

### Before you begin

You must first install the mounting brackets and cable guides on to the patch panel before you mount it on the wall. You can use the same rack mount brackets (700-113653-01) for wall mount.

## Procedure

**Step 1** Remove the mounting brackets from the accessory kit and position them beside the device.

**Note**
You can install the brackets as shown in the figure.

*Figure 58: Wall Mount - Single*

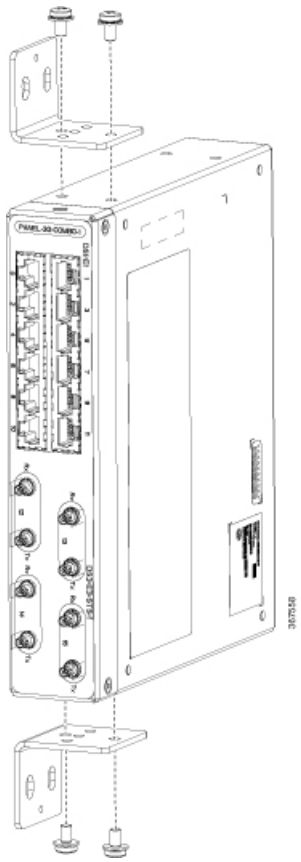

*Figure 59: Wall Mount - Dual*

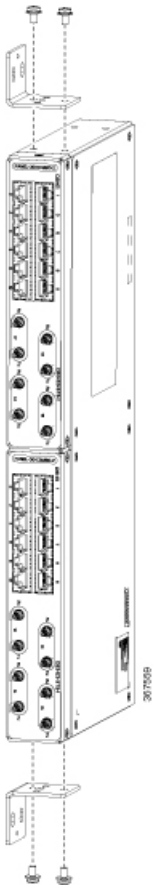

**Step 2** Secure the bracket to the device with the recommended maximum torque of 10 inch-pounds (1.1 newton meters).

**Step 3** Position the device vertically on the wall.

**Caution**
Before mounting the device, ensure that all unused holes at the sides of the device are protected with screws.

**Step 4** Use a tape measure and level to verify that the device is installed straight and on level.

# Patch Panel Dimensions

Following are the various patch panel dimensions.

*Figure 60: Patch Panel Without Brackets*

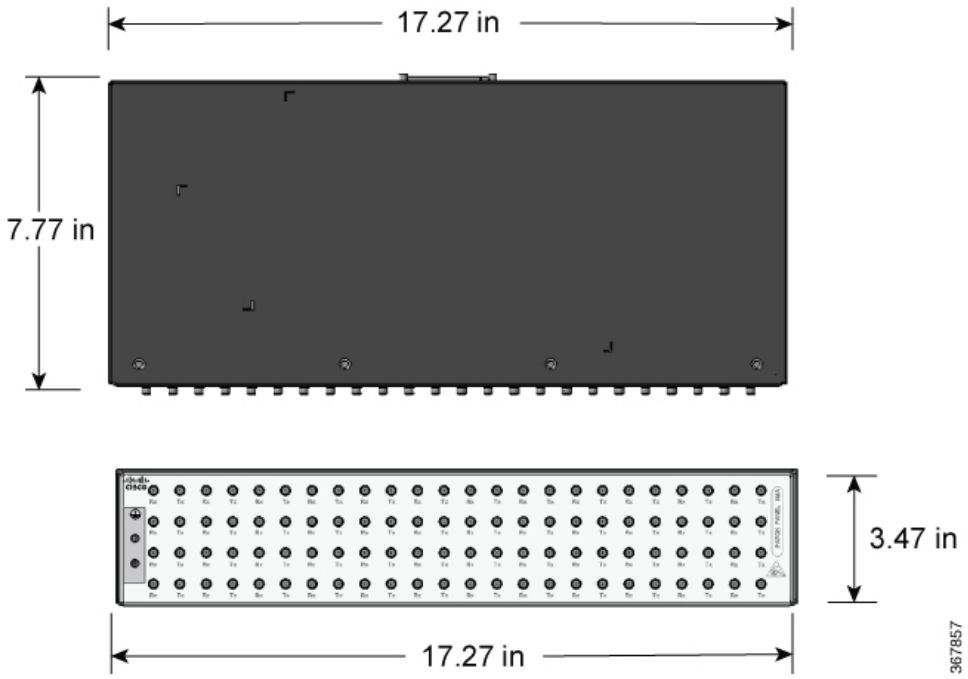


*Figure 61: Patch Panel With Brackets*

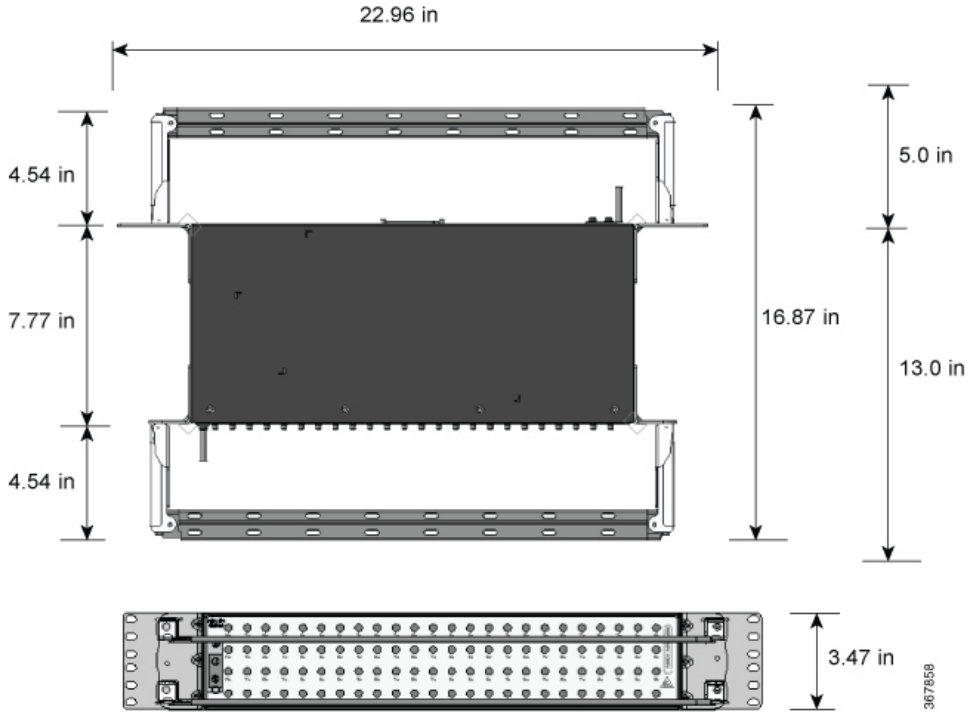

*Figure 62: AMP64 Patch Panel With Brackets*

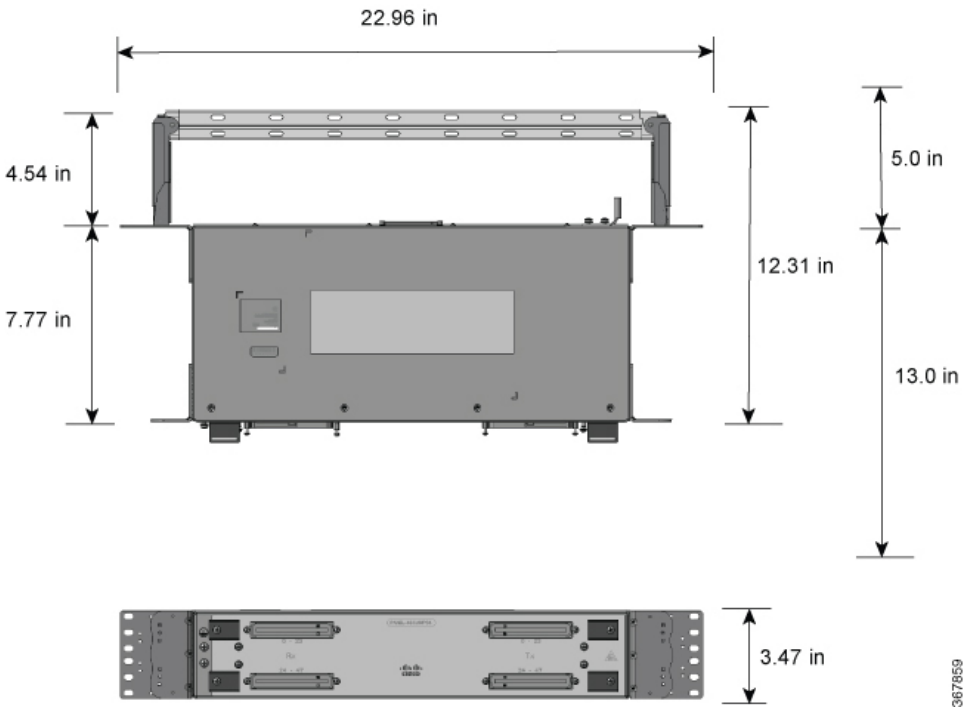

*Figure 63: 3G Patch Panel Without Brackets - Single*

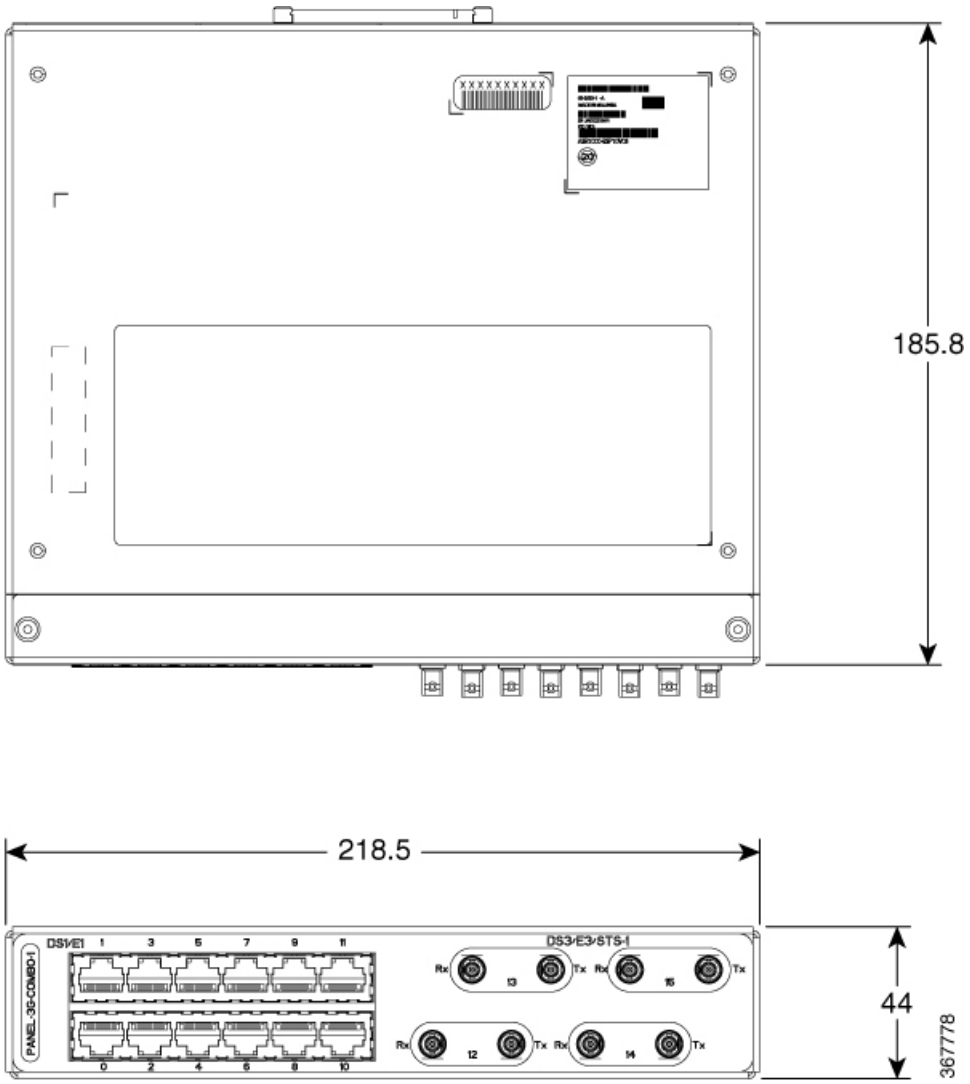

*Figure 64: 3G Patch Panel Without Brackets - Dual*

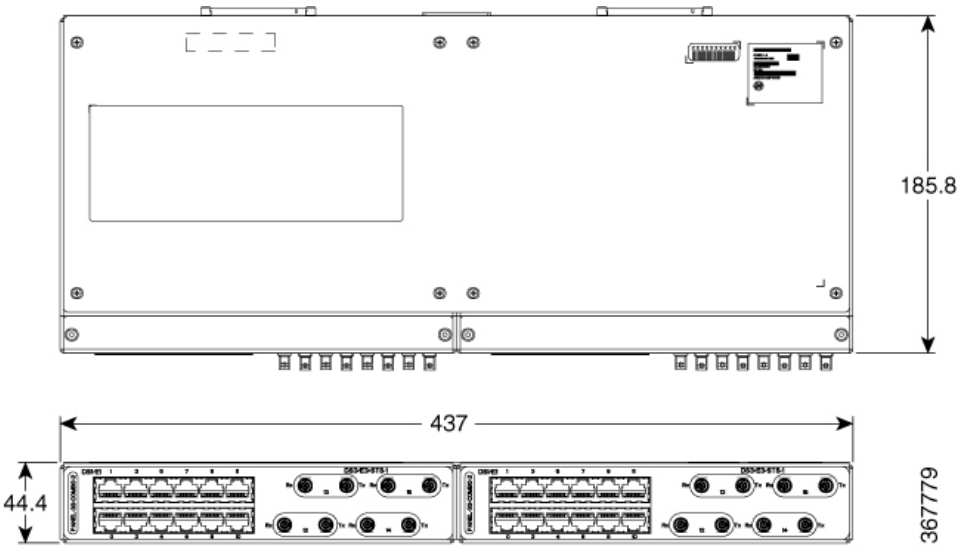


# Patch Panel Pinout

Given below are the pinout information for the regular crossover and the straight-through cable patch panel.

*Table 14: Pinout Details*

| Pin # | Crossover | Straight-through |
|---|---|---|
| 1 | Receive Tip | Transmit Tip |
| 2 | Receive Ring | Transmit Ring |
| 3 | — | — |
| 4 | Transmit Tip | Receive Tip |
| 5 | Transmit Ring | Receive Ring |
| 6 | — | — |
| 7 | — | — |
| 8 | — | — |

# Panel and Bracket

*Table 15: Panel and Bracket Details*

| Panel | Bracket Description |
|---|---|
| PANEL-3G-COMBO-1 | Single 12E1 + 4xDS3 patch panel for 3G CEM/IMSG IM (requires crossover cable) |
| PANEL-3G-COMBO-2 | Double 12E1 + 4xDS3 patch panel for 3G CEM/IMSG IM (requires crossover cable) |
| PANEL-3G-COMBO-1S | Single 12E1 + 4xDS3 patch panel for 3G CEM/IMSG (requires a straight-through cable) |
| PANEL-3G-COMBO-2S | Double 12E1 + 4xDS3 patch panel for 3G CEM/IMSG IM (requires a straight-through cable) |
| P3G1-RCKMNT-19IN | EIA 19 inches mounting brackets for single 3G CEM/IMSG IM patch panel |
| P3G1-RCKMNT-ETSI | ETSI 21 inches mounting brackets for single 3G CEM/IMSG IM patch panel |
| P3G1-RCKMNT-23IN | EIA 23 inches mounting brackets for single 3G CEM/IMSG IM patch panel |
| P3G2-RCKMNT-19IN | EIA 19 inches mounting brackets for double 3G CEM/IMSG IM patch panel |
| P3G2-RCKMNT-ETSI | ETSI 21 inches mounting brackets for double 3G CEM/IMSG IM patch panel |
| P3G2-RCKMNT-23IN | EIA 23 inches mounting brackets for double 3G CEM/IMSG IM patch panel |

# Installing the Power Supply

The Cisco NCS 4202 provides the choice of two different power supplies:

- DC power—The DC power supply uses 2-position terminal block-style connector with positive latching/securing and labeled connections for +24/48V, GRD, -24/48V. The terminal block connector is of suitable size to carry the appropriate AWG wire size to handle the input current of the power supply. No ON/OFF switch is provided.
- AC power—The AC power supply has an IEC 320-type power receptacle and a 15 Amp service connector. You can use standard right angle power cords with the AC power supply. The power supply includes a power cord retainer. No ON/OFF switch is provided.

You can install dual power supplies for redundancy.

**Warning** Read the installation instructions before connecting the system to the power source. Statement 10

**Note** Products that have an AC power connection are required to have an external surge protective device (SPD) provided as part of the building installation to comply with the Telcordia GR-1089 NEBS standard for electromagnetic compatibility and safety.

**Caution** Do not use interface module and power supply ejector handles to lift the chassis; using the handles to lift the chassis can deform or damage the handles.

# Power Connection Guidelines

This section provides guidelines for connecting the chassis's power supplies to the site power source.

**Warning** Never defeat the ground conductor or operate the equipment in the absence of a suitably installed ground conductor. Contact the appropriate electrical inspection authority or an electrician if you are uncertain that suitable grounding is available. Statement 213

**Warning** The plug-socket combination must be accessible at all times because it serves as the main disconnecting device. Statement 1019

**Warning** This product requires short-circuit (overcurrent) protection, to be provided as part of the building installation. Install only in accordance with national and local wiring regulations. Statement 1045

## Guidelines for DC-Powered Systems

Basic guidelines for DC-powered systems include the following:

- Each chassis power supply should have its own dedicated input power source. The source must comply with the safety extra-low voltage (SELV) requirements in the UL 60950, CSA 60950, EN 60950, and IEC 60950 standards.
- The circuit must be protected by a dedicated two-pole circuit breaker. The circuit breaker should be sized according to the power supply input rating and local or national code requirements.
- The circuit breaker is considered the disconnect device and should be easily accessible.
- The system ground is the power supply and chassis ground.
- Do not connect the DC return wire to the system frame or to the system-grounding equipment.
- Use the grounding lug to attach a wrist strap for ESD protection during servicing.

- If the chassis is powered with -48V grounding of the positive, the it should be done at the power source side and chassis should protected by a dedicated two-pole circuit breaker.

## Guidelines for AC-Powered Systems

Basic guidelines for AC-powered systems include the following:

- Each chassis power supply should have its own dedicated branch circuit.
- The circuit breaker should be sized according to the power supply input rating and local or national code requirements.
- The AC power receptacles used to plug in the chassis must be the grounding type. The grounding conductors that connect to the receptacles should connect to protective earth ground at the service equipment.

## Preventing Power Loss

Use the following guidelines to prevent power loss to the chassis:

- To prevent loss of input power, ensure that the total maximum load on each circuit supplying the power supplies is within the current ratings of the wiring and breakers.
- In some systems, you can use an UPS to protect against power failures at your site. Avoid UPS types that use ferroresonant technology. These UPS types can become unstable with systems such as the Cisco NCS 4202 Series Chassis, which can have substantial current-draw fluctuations due to bursty data traffic patterns.

Use the information in the Cisco NCS 4202 Specifications table to estimate the power requirements and heat dissipation of the chassis based on a given configuration of the chassis. Determining power requirements is useful for planning the power distribution system needed to support the chassis.

# Installing the DC Power Supply Module

**Note** This equipment is suitable for installation in Network Telecommunications Facilities and locations where the NEC applies.

**Note** This equipment is suitable for installations utilizing the Common Bonding Network (CBN).

**Note** The grounding architecture of this product is DC-Isolated (DC-I) for DC-powered products. DC-powered products have a nominal operating DC voltage of 48 VDC.

Perform the following procedure to install the power supply module:

### Procedure

**Step 1** Ensure that the system (earth) ground connection has been made. See below figure.

**Step 2** If necessary, remove the blank power supply filler plate from the chassis power supply bay opening by loosening the captive installation screws.

**Step 3** Verify that power to the DC circuit connected to the power supply you are installing is off. To ensure that power has been removed from the DC circuits, locate the circuit breakers for the DC circuits, switch the circuit breakers to the OFF position, and tape the circuit-breaker switches in the OFF position.

**Step 4** Grasp the power supply handle with one hand. Place your other hand underneath the power supply. Slide the power supply into the power supply bay. Make sure that the power supply is fully seated in the bay.

**Step 5** Tighten the captive installation screws of the power supply. The recommended maximum torque is 5.5 in.-lb (0.62 N-m).

***Figure 65: Installing the DC Power Supply Module***

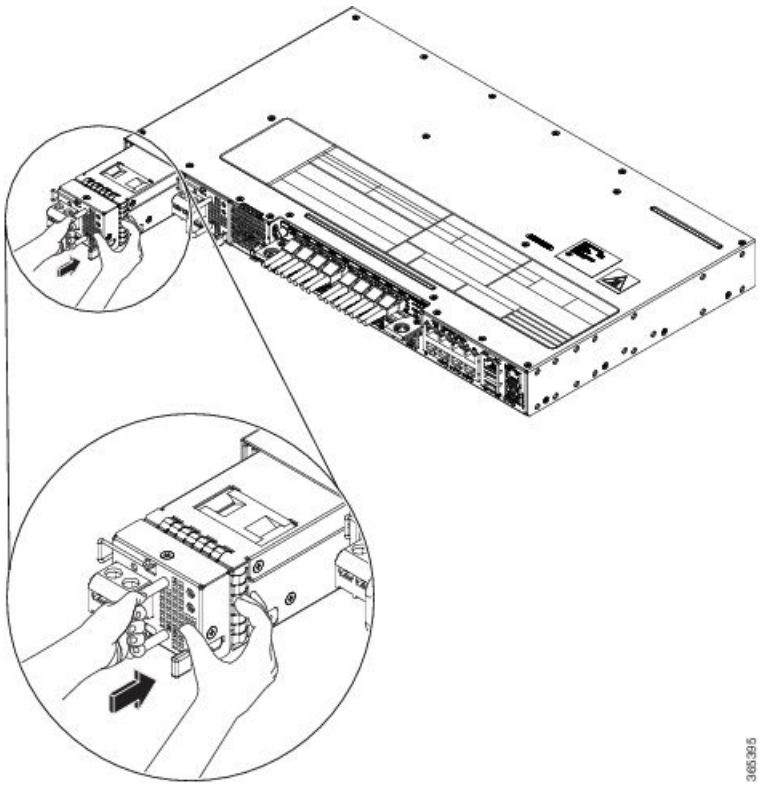


## Activating a DC Power Supply Module

Perform the following procedure to activate a DC power supply:

**Procedure**

**Step 1** Remove the tape from the circuit-breaker chassis handle, and restore power by moving the circuit-breaker chassis handle to the On (|) position.

**Step 2** Verify power supply operation by checking if the respective power supply front panel LED (PS0 or PS1) is green.

**Step 3** If the LEDs indicate a power problem, see *Troubleshooting*.

**Step 4** If you are connecting a redundant DC power supply, repeat these steps for the second power source.

**Note**
If you are connecting a redundant DC power supply, ensure that each power supply is connected to a separate power source in order to prevent power loss in the event of a power failure.

## Installing the DC Power Cables

**Note** When installing DC power supply, use 14 AWG, 90°C wires. Always ensure that the building's installation for short-circuit (overcurrent) protection does not exceed 15A.

**Note** The DC connector or terminal block has an inbuilt screw and cage nut to which a torque of 1.3 to 1.8 N-m can be applied.

***Figure 66: DC Connector With Inbuilt Screw***

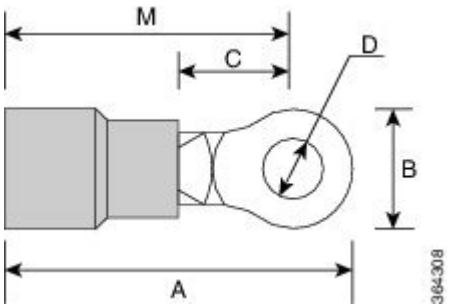


| | | | |
|---|---|---|---|
| A | 0.97 inches | C | 0.27 inches |
| B | 0.31 inches | M | 0.81 inches |

To attach the DC power supplies:

**Procedure**

**Step 1** Locate the terminal block plug.

**Step 2** Insert the DC-input power source wires into the terminal block plug.

**Step 3** Attach the DC supply wires using the designated screws.

**Step 4** Use a ratcheting torque screwdriver to torque the terminal block plug captive screw. See figure below.

*Figure 67: Attaching the DC Power Supply Wires*

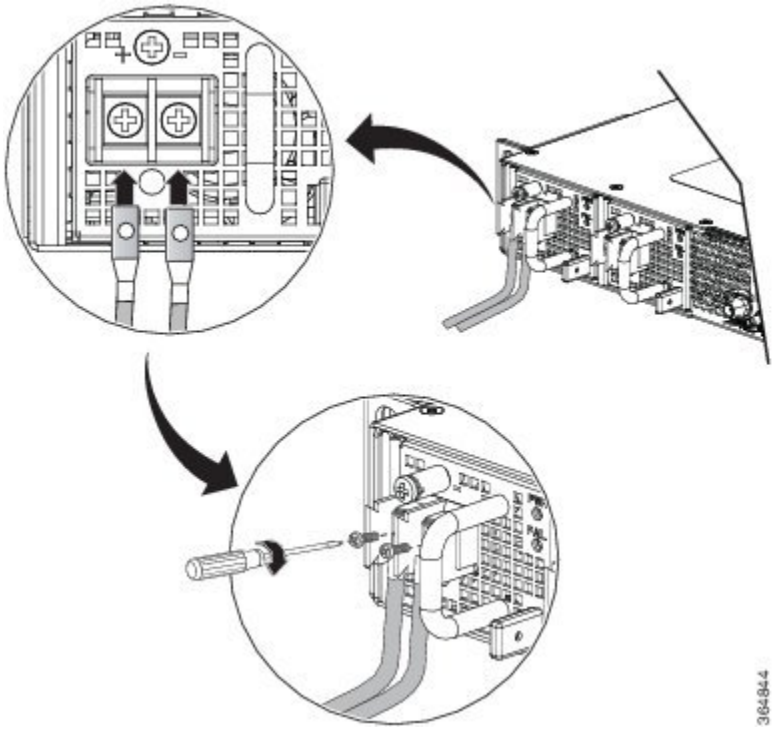


# Removing the DC Power Supply Module

This section provides information about removing and replacing the DC power supply.

**Warning** Before performing any of the following procedures, ensure that power is removed from the DC circuit. Statement 1003

**Warning** Only trained and qualified personnel should be allowed to install, replace, or service this equipment. Statement 1030

Follow these steps to remove and replace the DC power supply:

**Procedure**

**Step 1** Before servicing the power supply, switch off the circuit breaker in your equipment area. As an additional precaution, tape the circuit-breaker switch in the Off position.

**Step 2** Slip on the ESD-preventive wrist strap that was included in the accessory kit.

**Step 3** Switch the power supply circuit-breaker switch to the Off (O) position.

**Step 4** Pull the terminal block plug connector out of the terminal block head in the power supply. See figure below.

**Step 5** Loosen the captive screws on the DC power supply.

**Step 6** Grasp the power supply handle. Simultaneously press the power supply lock towards the left and pull the power supply out from the chassis while supporting it with the other hand.

***Figure 68: Removing the DC Power Supply Module***

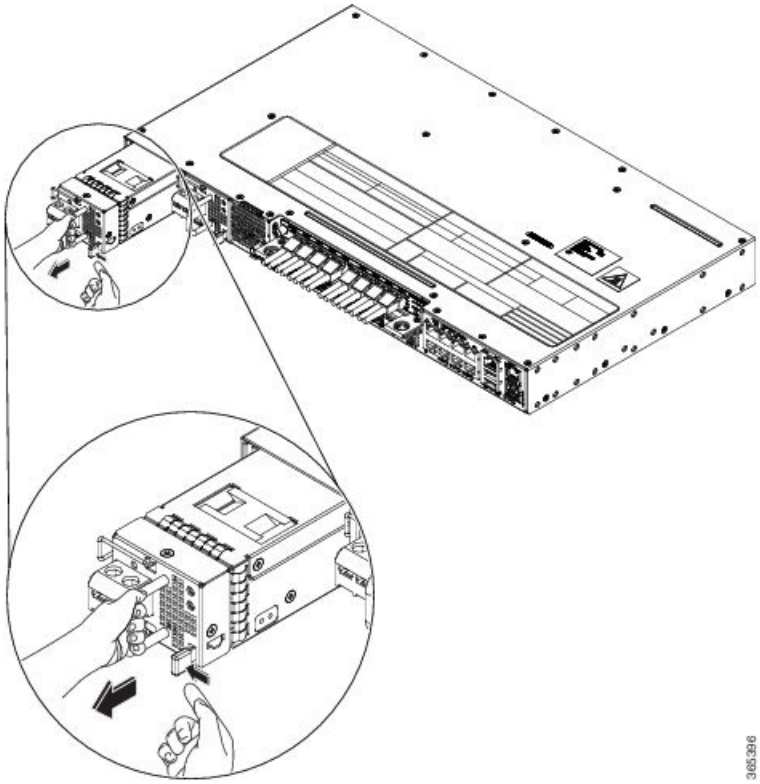


# Installing the AC Power Supply Module

Follow these steps to install the AC power supply module:

## Procedure

**Step 1** Ensure that the system (earth) ground connection has been made.

**Step 2** If necessary, remove the blank power supply filler plate from the chassis power supply bay opening by loosening the captive installation screws.

**Step 3** Grasp the power supply handle with one hand. Place your other hand underneath the power supply. Slide the power supply into the power supply bay. Make sure that the power supply is fully seated in the bay. See below figure.

*Figure 69: Installing the AC Power Supply Module*

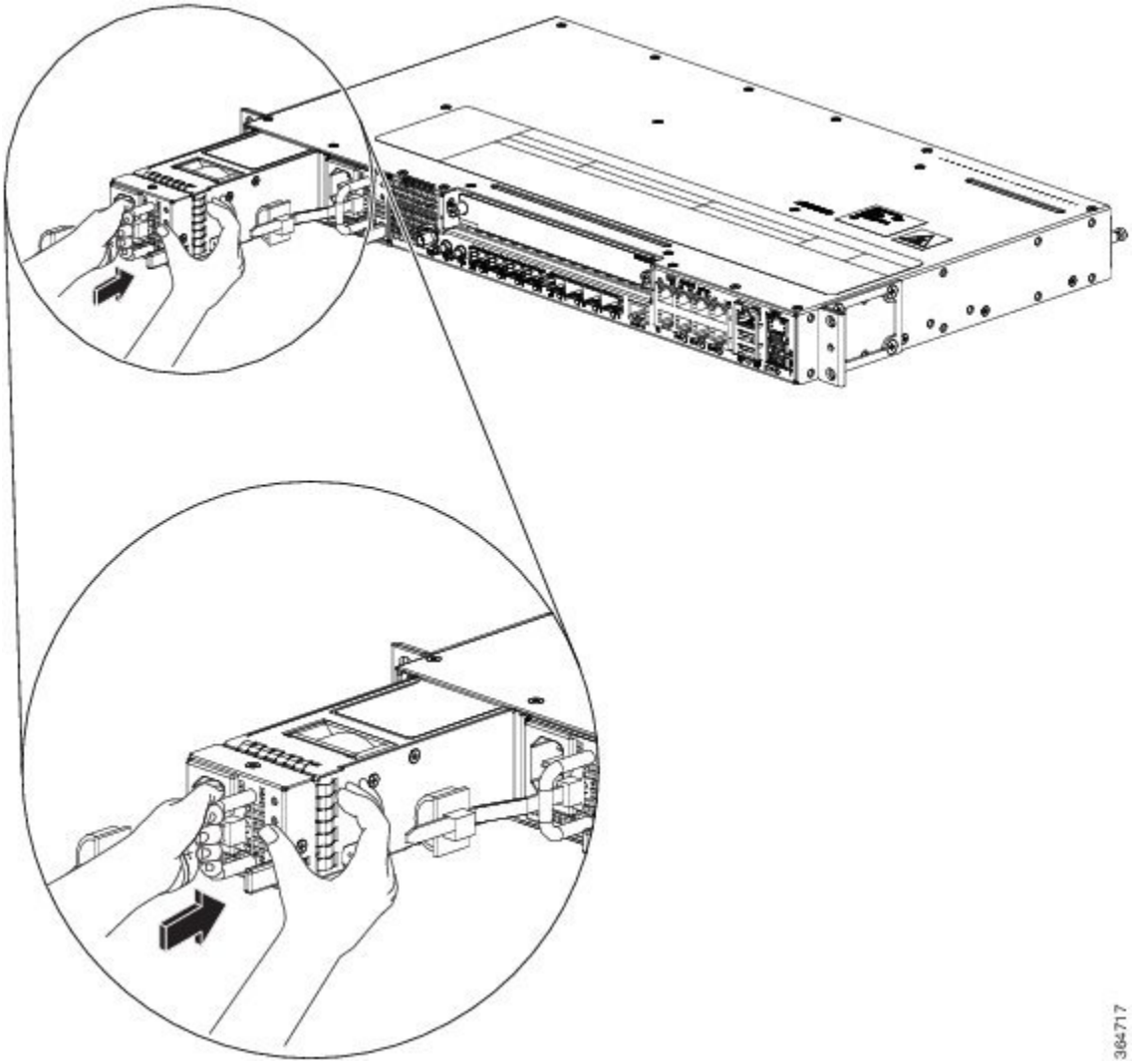


**Step 4** Slide the AC power supply cord inside the tie of the tie-and-holder and tighten the tie around the power supply cord.

**Step 5** Plug the power supply cord into the AC power supply.

## Installing the AC Power Cables

To install the AC power cables in the power supply slots:

**Procedure**

**Step 1** Plug the power supply cord in the power supply module.

**Step 2** Insert the power supply cord into the tie [1] and tighten the tie around the power supply cord as shown in [2] in the figure below.

*Figure 70: Attaching the AC Power Tie-and-Clip Cord*

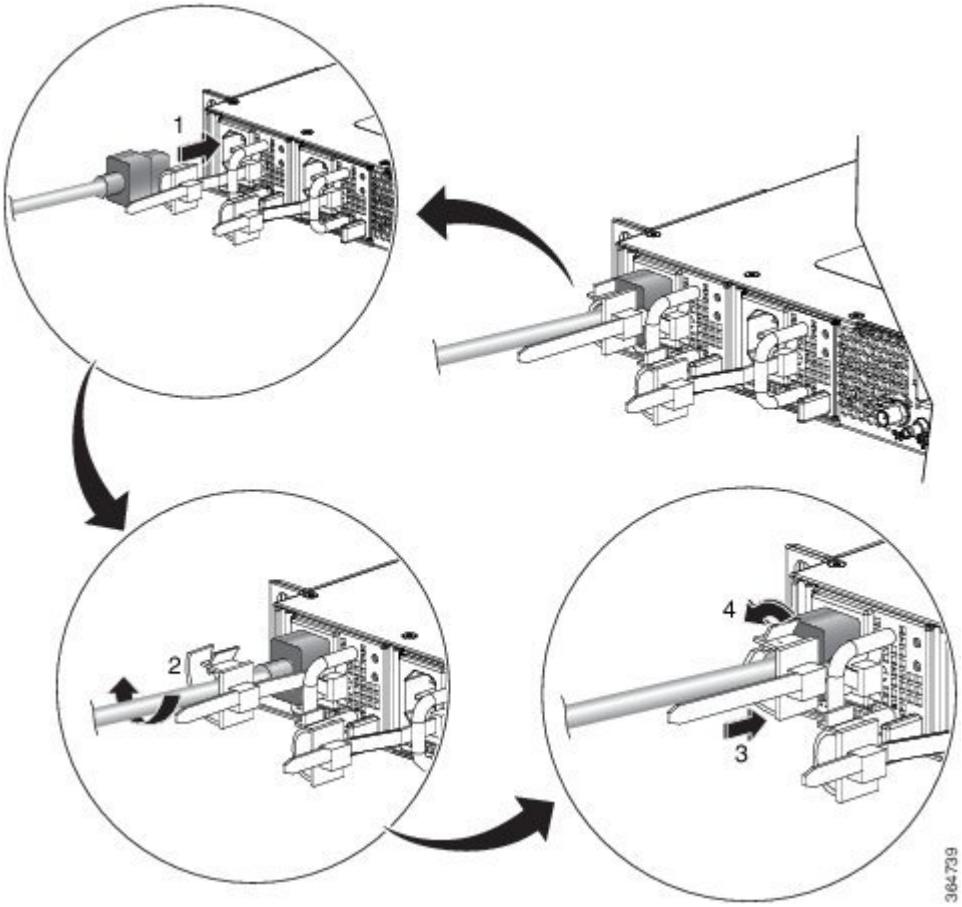


## Activating an AC Power Supply Module

Perform the following procedure to activate an AC power supply:

### Procedure

**Step 1** Plug the power cord into the power supply.

**Step 2** Connect the other end of the power cord to an AC-input power source.

**Step 3** Verify power supply operation by checking if the respective power supply front panel LED (PS0 or PS1) is green.

**Step 4** If the LEDs indicate a power problem, see *Troubleshooting* for troubleshooting information.

**Step 5** If you are connecting a redundant AC power supply, repeat these steps for the second power source.

**Note**
If you are connecting a redundant AC power supply, ensure that each power supply is connected to a separate power source in order to prevent power loss in the event of a power failure.

## Removing the AC Power Supply Module

This section describes how to remove and replace the AC power supply.

**Warning** When you install the unit, the ground connection must always be made first and disconnected last. Statement 1046

**Warning** Only trained and qualified personnel should be allowed to install, replace, or service this equipment. Statement 1030

**Warning** Installation of the equipment must comply with local and national electrical codes. Statement 1074

Follow these steps to remove and replace the AC power supply:

### Procedure

**Step 1** Disconnect the power cord from the power source. Do not touch any metal on the power cord when it is still connected to the power supply.

**Step 2** Loosen the tie and remove the power cord from the tie-and holder.

**Step 3** Remove the power cord from the power connection on the power supply. Do not touch the metal prongs embedded in the power supply.

**Step 4** Grasp the power supply handle. Simultaneously press the power supply lock towards the left and pull the power supply out from the chassis while supporting it with the other hand.

*Figure 71: Removing the AC Power Supply Module*

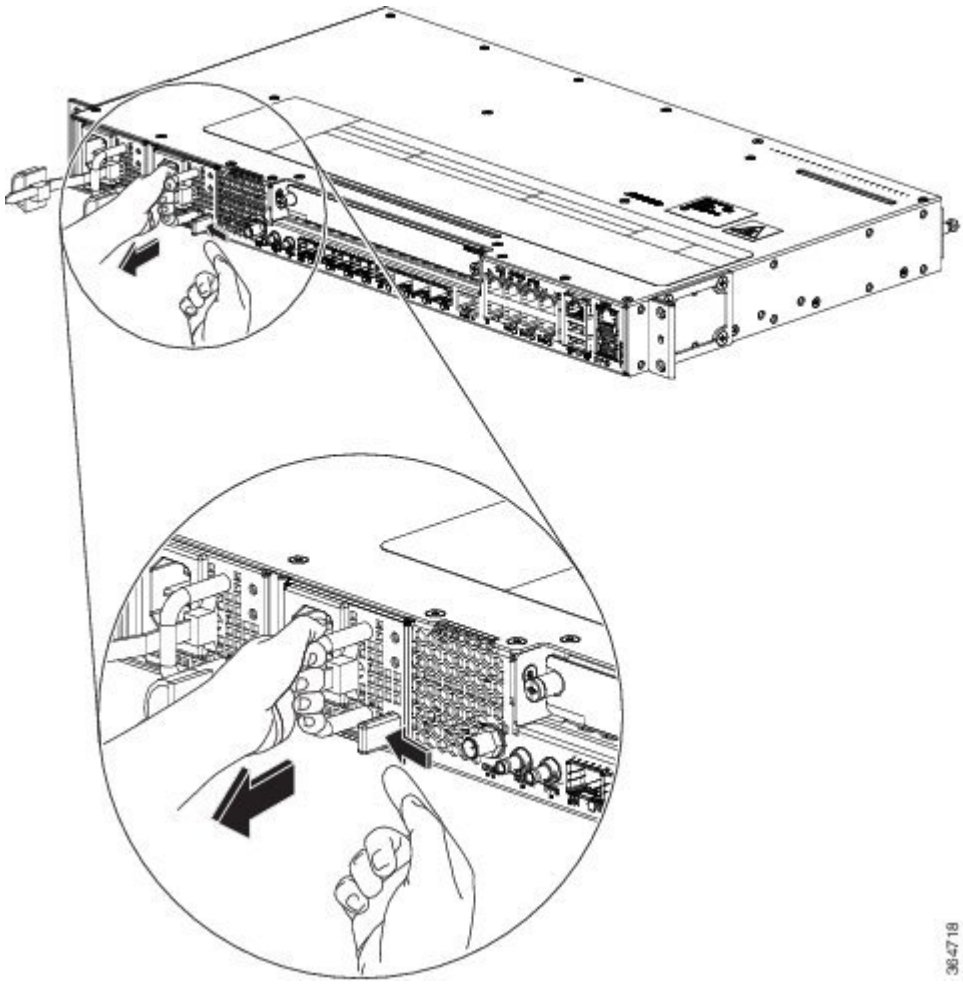


## Powering On the Chassis

After the chassis is either rack mounted or mounted on the wall, perform these tasks to complete the installation:

- Power on the chassis.
- Connect the front-panel ports. See the *Connecting to SFP Modules*, to complete the installation.

# Connecting the Chassis to the Network

The following sections describe how to connect a chassis to the network:

**Note** Connect only SELV services to all the ports.

# Connecting Console Cables

The following sections describe how to connect to the chassis using console cables:

## Connecting to the USB Serial Port Using Microsoft Windows

This procedure shows how to connect to the USB serial port using Microsoft Windows.

**Note** Install the USB device driver before establishing a physical connection between the chassis and the PC, by using the USB console cable plugged into the USB serial port. Otherwise, the connection will fail. For more information, see the *Installing the Cisco USB Device Driver* section.

**Procedure**

**Step 1** Connect a USB Type A-to-Type A cable to the USB console port, as shown in Removing the AC Power Supply Module figure. If you are using the USB serial port for the first time on a Windows-based PC, install the USB driver now according to the instructions in the following sections:

**Note**
You cannot use the USB port and the EIA port concurrently. When the USB port is used, it takes priority over the EIA port.

**Step 2** Connect the USB Type A cable to the PC.

**Step 3** To communicate with the chassis, start a terminal emulator application, such as Microsoft Windows HyperTerminal. This software should be configured with the following parameters:

- 9600 baud
- 8 data bits
- no parity
- 1 stop-bit
- no flow control

## Connecting to the Console Port Using Mac OS X

This procedure describes how to connect a Mac OS X system USB port to the console using the built-in OS X terminal utility.

**Procedure**

**Step 1** Use the Finder to choose Applications > Utilities > Terminal.

**Step 2** Connect the OS X USB port to the chassis.

**Step 3** Enter the following commands to find the OS X USB port number:

**Example:**

```
macbook:user$ cd /dev
macbook:user$ ls -ltr /dev/*usb*
crw-rw-rw-  1 root    wheel       9,  66 Apr  1 16:46 tty.usbmodem1a21 DT-macbook:dev user$
```

**Step 4** Connect to the USB port with the following command followed by the chassis USB port speed:

**Example:**

```
macbook:user$ screen /dev/tty.usbmodem1a21 9600
```

To disconnect the OS X USB console from the terminal window, enter **Ctrl-a** followed by **Ctrl-**

## Connecting to the Console Port Using Linux

This procedure shows how to connect a Linux system USB port to the console using the built-in Linux terminal utility.

### Procedure

**Step 1** Open the Linux terminal window.

**Step 2** Connect the Linux USB port to the chassis.

**Step 3** Enter the following commands to find the Linux USB port number:

**Example:**

```
root@usb-suse# cd /dev
root@usb-suse /dev# ls -ltr *ACM*
crw-r--r--    1 root     root     188,   0 Jan 14 18:02 ttyACM0
root@usb-suse /dev#
```

**Step 4** Connect to the USB port with the following command, followed by the chassis USB port speed:

**Example:**

```
root@usb-suse /dev# screen /dev/ttyACM0 9600
```

To disconnect the Linux USB console from the terminal window, enter **Ctrl-a** followed by : then **quit**

## Installing the Cisco USB Device Driver

A USB device driver must be installed the first time a Microsoft Windows-based PC is connected to the USB serial port on the chassis.

This procedure describes how to install the Microsoft Windows USB device driver in Microsoft Windows XP, Windows Vista, Windows 2000, Windows 7, and Windows 8. Download the driver for your chassis model from the Tools and Resources Download Software site, USB Console Software category, at:

https://software.cisco.com/download/release.html?mdfid=286037604&flowid=71056&softwareid=282855122&release=3.13&relind=AVAILABLE&rellifecycle=&reltype=latest

**Note** To download the driver, you must have a valid service contract associated to your Cisco.com profile.

### Procedure

**Step 1** Unzip the file asr-9xx_usbconsole_drivers.zip.

**Step 2** Double-click xrusbser_ver2100_installer.exe in the XR21x141x-Win-DriversOnly-Vers2.1.0.0/EXE folder.

Installation Wizard GUI is displayed.

**Step 3** Click Next. The InstallShield Wizard Completed window is displayed.

**Step 4** Click Finish.

**Step 5** Connect the USB cable to the PC and chassis USB console ports. Follow the on-screen instructions to complete the installation of the driver.

**Step 6** XR21V1401 USB UART Device driver successfully installed message is displayed.

The USB console is ready for use.

# Uninstalling the Cisco USB Driver

*Figure 72: Connecting the USB Console Cable to the Cisco NCS 4202*

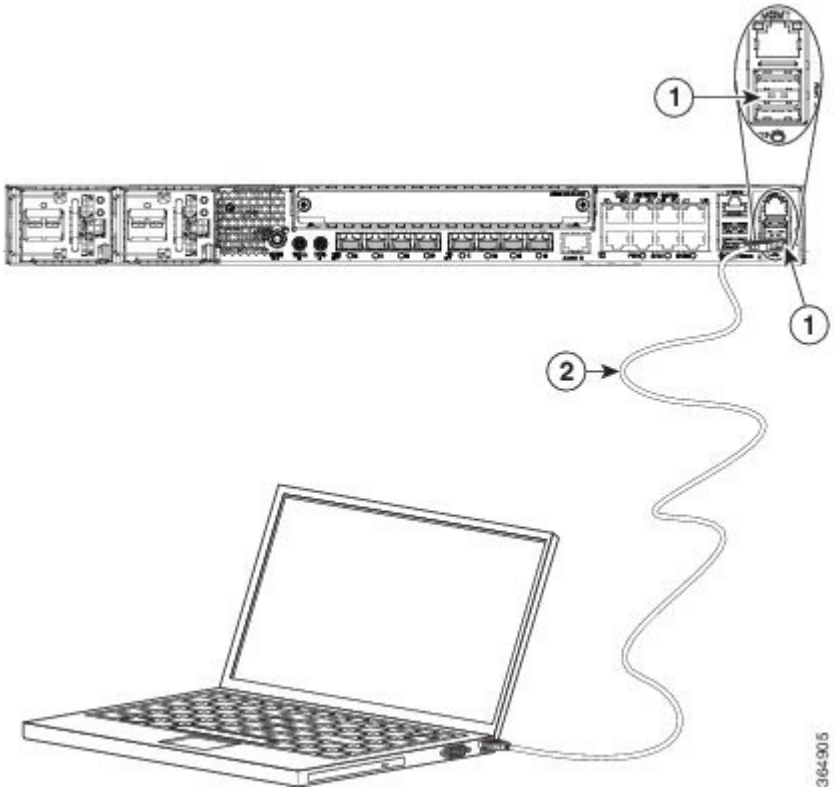


| | | | |
|---|---|---|---|
| 1 | USB Type-A console port | 2 | USB Type-A to USB Type-A console cable |

This procedure describes how to uninstall the Microsoft Windows USB device driver in Microsoft Windows XP, Windows Vista, Windows 2000, Windows 7, and Windows 8.

**Note** Disconnect the chassis console terminal before uninstalling the driver.

### Procedure

**Step 1** Choose Start > Control Panel > Add or Remove Programs.

**Step 2** Scroll to **Windows Driver Package - Exar corporation (xrusbser) Ports** and click **Remove**. The **Program Maintenance** window is displayed.

**Step 3** Click **Yes** to uninstall the driver.

# Connecting to the EIA Console Port

**Note** The US-to-RJ45 adapter cable and the DB9 console cable are not included with the chassis; they can be ordered separately from Cisco.

**Note** The serial console cable kit is not included with the chassis; it is ordered separately.

To connect a terminal to the EIA Console port on the chassis, follow these steps:

### Procedure

**Step 1** Connect the USB end of the USB-to RJ-45 cable to the EIA Console port.

**Step 2** Connect the RJ-45 end of the DB-9 adapter cable to the USB-to RJ-45 cable, as shown in below figure.

*Figure 73: Connecting a Modem to the Cisco NCS 4202 Series Chassis*

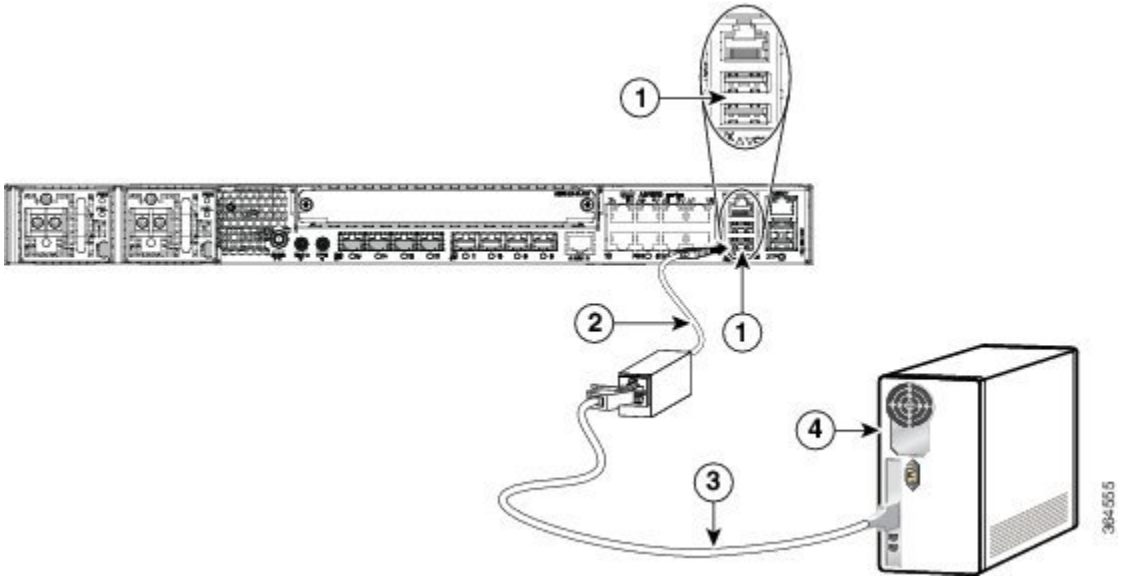


**Step 3** Connect the DB-9 end of the console cable to the DB-9 end of the terminal.

**Step 4** To communicate with the chassis, start a terminal emulator application, such as Microsoft Windows HyperTerminal. This software should be configured with the following parameters:

| Label | Component | Label | Component |
|---|---|---|---|
| 1 | EIA Console port | 3 | RJ-45 to DB-9 cable |
| 2 | USB-to-RJ45 adapter | 4 | Desktop or system |

- 9600 baud
- 8 data bits
- no parity
- 1 stop-bit
- no flow control

# Connecting a Management Ethernet Cable

When using the Ethernet Management port in the default mode (speed-auto and duplex-auto) the port operates in the auto-MDI/MDI-X mode. The port automatically provides the correct signal connectivity through the Auto-MDI/MDI-X feature. The port automatically senses a crossover or straight-through cable and adapts to it.

However, when the Ethernet Management port is configured to a fixed speed (10, 100, or 1000 Mbps) through command-line interface (CLI) commands, the port is forced to the MDI mode.

When in a fixed-speed configuration and MDI mode:

- Use a crossover cable to connect to an MDI port
- Use a straight-through cable to connect to an MDI-X port

**Caution** To comply with the Telcordia GR-1089 NEBS standard for electromagnetic compatibility and safety, connect the Management Ethernet ports only to intra-building or unexposed wiring or cable. The intrabuilding cable must be shielded and the shield must be grounded at both ends. The intra-building port(s) of the equipment or subassembly must not be metallically connected to interfaces that connect to the OSP or its wiring. These interfaces are designed for use as intra-building interfaces only (Type 2 or Type 4 ports as described in GR-1089-CORE) and require isolation from the exposed OSP cabling. The addition of Primary Protectors is not sufficient protection in order to connect these interfaces metallically to OSP wiring.

# Installing and Removing SFP and SFP+ Modules

The Cisco NCS 4202 Series Chassis supports a variety of SFP and SFP+ modules, including optical and Ethernet modules. For information on how to install and remove SFP and SFP+ modules, see the documentation for the SFP or SFP+ module at:

http://www.cisco.com/en/US/partner/products/hw/modules/ps5455/prod_installation_guides_list.html

For information about inspecting and cleaning fiber-optic connections, see http://www.cisco.com/en/US/partner/tech/tk482/tk876/technologies_white_paper09186a0080254eba.shtml

**Caution** We recommend that you wait for 30 seconds between the removal and insertion of an SFP on an interface module. We recommend this to allow the transceiver software to initialize and synchronize with the Cisco NCS 4202 Series Chassis. Changing an SFP more quickly could result in transceiver initialization issues that disable the SFP.

# Connecting a USB Flash Device

To connect a USB flash device to the chassis, insert the memory stick in the USB port labeled USB MEM. The Flash memory module can be inserted only one way, and can be inserted or removed regardless of whether the chassis is powered up or not.

Figure below shows the USB port connector on the Cisco NCS 4202 Series Chassis.

***Figure 74: Flash Token Memory Stick***

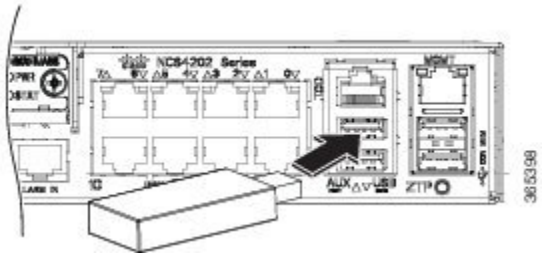


## Removing a USB Flash Device

**Note** If the USB flash device is abruptly removed, the constant sync operations of the file system in progress fail due to the USB device removal. These errors occur with ext2 or ext3 or ext4 file systems and are not seen with fat32 file system. This is a default behavior on any Linux platform.

The following error messages are displayed when you remove the USB device:

```
*Jun 24 10:29:45.766: %IOSXE-3-PLATFORM: R0/0: kernel: EXT2-fs (sda1): previous I/O error
to superblock detected
*Jun 24 10:29:45.878: %IOSXE-3-PLATFORM: R0/0: kernel: EXT2-fs (sda1): previous I/O error
to superblock detected
*Jun 24 10:29:46.012: %IOSXE-3-PLATFORM: R0/0: kernel: EXT2-fs (sda1): previous I/O error
to superblock detected
*Jun 24 10:29:46.013: %IOSXE-3-PLATFORM: R0/0: kernel: EXT2-fs (sda1): previous I/O error
to superblock detected
```

To remove and replace a USB flash token memory stick from and into a chassis, follow these steps:

### Procedure

**Step 1** Pull the memory stick from the USB port.

**Step 2** To replace the Cisco USB Flash memory stick, simply insert the module into the USB port labeled USB MEM. The Flash memory module can be inserted only one way, and can be inserted or removed regardless of whether the chassis is powered up or not.

This completes the USB Flash memory installation procedure.

# Connecting Timing Cables

The following sections describe how to connect timing cables to the Cisco NCS 4202 Series Chassis:

## Connecting Cables to a GPS Interface

The following sections describe how to connect cables from the Cisco NCS 4202 to a GPS unit for input or output timing of frequency:

### Connecting a Cable to the Input 10-Mhz or 1-PPS Interface

**Procedure**

**Step 1** Connect one end of a shielded mini-coax cable to the GPS unit.

**Step 2** Connect the other end of the shielded mini-coax cable to the 10-Mhz or 1-PPS port on the Cisco NCS 4202 Series Chassis.

### Connecting a Cable to the Output 10-Mhz or 1-PPS Interface

**Procedure**

**Step 1** Connect one end of a shielded mini-coax cable to the Slave unit.

**Step 2** Connect the other end of the shielded mini-coax cable to the 10-Mhz or 1-PPS port on the Cisco NCS 4202 Series Chassis.

### Connecting a Cable to the ToD Interface

**Procedure**

**Step 1** Connect one end of a straight-through Ethernet cable to the GPS unit.

**Step 2** Connect the other end of the straight-through Ethernet cable to the ToD or 1-PPS port on the Cisco NCS 4202 Series Chassis.

**What to do next**

**Note** For instructions on how to configure clocking, see the *Cisco NCS 4200 Series Configuration Guide* .

**Warning** To comply with the Telcordia GR-1089 NEBS standard for electromagnetic compatibility and safety, connect the ToD ports only to intra-building or unexposed wiring or cable. The intrabuilding cable must be shielded and the shield must be grounded at both ends. The intra-building port(s) of the equipment or subassembly must not be metallically connected to interfaces that connect to the OSP or its wiring. These interfaces are designed for use as intra-building interfaces only (Type 2 or Type 4 ports as described in GR-1089-CORE) and require isolation from the exposed OSP cabling. The addition of Primary Protectors is not sufficient protection in order to connect these interfaces metallically to OSP wiring.

**Note** For more information about GPS-port pinouts, see *Troubleshooting*.

# Connecting Ethernet Cables

The Cisco NCS 4202 Series Chassis interface modules support RJ-45 and Ethernet SFP ports. For instructions on how to connect cables to Ethernet SFP ports, see the *Connecting Cables to SFP Modules*.

The RJ-45 port supports standard straight-through and crossover Category 5 unshielded twisted-pair (UTP) cables. Cisco does not supply Category 5 UTP cables; these cables are available commercially.

**Warning** To comply with the Telcordia GR-1089 NEBS standard for electromagnetic compatibility and safety, connect the Gigabit Ethernet ports only to intra-building or unexposed wiring or cable. The intrabuilding cable must be shielded and the shield must be grounded at both ends. The intra-building port(s) of the equipment or subassembly must not be metallically connected to interfaces that connect to the OSP or its wiring. These interfaces are designed for use as intra-building interfaces only (Type 2 or Type 4 ports as described in GR-1089-CORE) and require isolation from the exposed OSP cabling. The addition of Primary Protectors is not sufficient protection in order to connect these interfaces metallically to OSP wiring.

Follow these steps to connect a cable to a copper Gigabit Ethernet port:

**Procedure**

**Step 1** Confirm that the chassis is powered off.

**Step 2** Connect one end of the cable to the Gigabit Ethernet port on the chassis.

**Step 3** Connect the other end to the BTS patch or demarcation panel at your site.

# Connecting Cables to SFP Modules

For information on connecting cables to Cisco optical and Ethernet SFP interfaces, see:

http://www.cisco.com/en/US/partner/products/hw/modules/ps5455/prod_installation_guides_list.html.

# Connector and Cable Specifications

For more information on cable specifications and pinouts, see *Troubleshooting*.

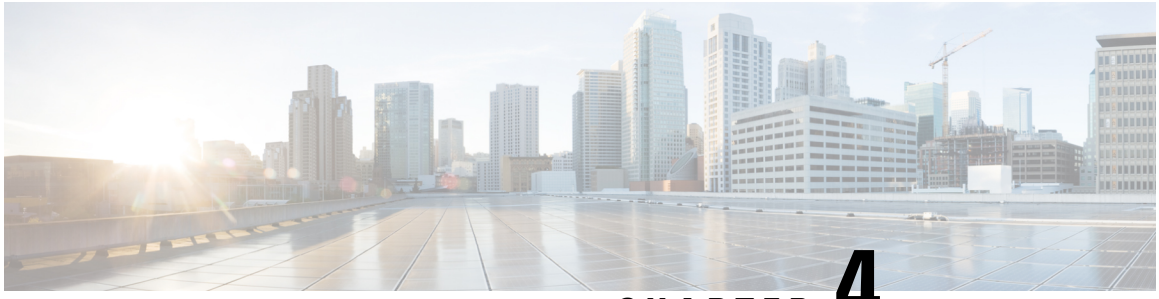

CHAPTER 4

# Initial Configuration

This chapter guides you through a basic chassis configuration, which is sufficient for you to access your network. Complex configuration procedures are beyond the scope of this publication and can be found in the modular configuration and modular command reference publications in the Cisco IOS software configuration documentation set that corresponds to the software release installed on your Cisco hardware.

To configure a Cisco NCS 4202 from a console, connect a terminal to the chassis console port.

This chapter contains the following sections:


- Checking Conditions Prior to System Startup , on page 109
- Powering Up the Chassis, on page 109
- Configuring the Chassis at Startup, on page 111
- Safely Powering Off the chassis, on page 113


## Checking Conditions Prior to System Startup

Ensure that the following conditions are addressed before starting up the chassis:

- The optional Gigabit Ethernet Management port cable is installed.
- The chassis is securely mounted and grounded.
- The power and interface cables are connected.
- Your PC with terminal emulation program (HyperTerminal or equivalent) is connected to the console port and powered up.
- Your PC terminal emulation program is configured for 9600 baud, 8 data bits, 1 stop-bit, no parity, and no flow control is set to none.
- You have selected passwords for access control.
- Captive installation screws are tight on all the removable components.
- The console terminal is turned on.
- You have determined the IP addresses for the Ethernet and serial interfaces.

## Powering Up the Chassis

After installing your chassis and connecting cables, power on the chassis and follow these steps:

**Procedure**

**Step 1** Switch on the power supply. Check for the PSU LEDs to stay green.

**Caution**
Do not press any keys on the keyboard until the messages stop and the PWR LED is solid green. Any keys pressed during this time are interpreted as the first command typed when the messages stop, which might cause the chassis to power off and start over. It takes a few minutes for the messages to stop.

**Step 2** Observe the initialization process. When the system boot is complete, the chassis begins to initialize.

During the boot process, observe the system LEDs. After the chassis has booted, the green STAT LED comes on and stays on.

# Verifying the Front Panel LEDs

The front-panel indicator LEDs provide power, activity, and status information useful during bootup. For more detailed information about the LEDs, see the *LED Indicators* section.

# Verifying the Hardware Configuration

To display and verify the hardware features, enter the following commands:

- **show version**—Displays the system hardware version, the installed software version, the names and sources of configuration files, the boot images, and the amount of installed DRAM, NVRAM, and flash memory.
- **show diag slot**—Displays the IDPROM information for the assemblies in the chassis.

# Checking Hardware and Software Compatibility

To check the minimum software requirements of Cisco IOS software with the hardware installed on your chassis, Cisco maintains the Software Advisor tool on Cisco.com. The tool provides the minimum Cisco IOS requirements for individual hardware modules and components.

**Note** To access this tool, you must have a Cisco.com login account.

To access the Software Advisor:

1. Click **Login** at Cisco.com. The login page with fields for User Name and Password is displayed.
2. Type your registered User Name and Password and click on the Log in button.
3. Type **Software Advisor** in the search box, and click **on the magnifying lens icon next to the search box.**
4. From the displayed search result, click the link for the Software Advisor Tool.

5. Choose a product family or enter a specific product number to search for the minimum supported software needed for your hardware.

# Configuring the Chassis at Startup

This section explains how to create a basic running configuration for your chassis.

**Note** You must acquire the correct network addresses from your system administrator or consult your network plan to determine the correct addresses before you can complete the chassis configuration.

Before continuing the configuration process, check the current state of the chassis by entering the **show version** command. This command displays the release of Cisco IOS software that is available on the chassis.

For information on modifying the configuration after you create it, see the Cisco IOS configuration and Cisco IOS Master Command List, All Releases guides.

To configure a Cisco NCS 4202 from the console, you must connect a terminal or terminal server to the console port on the Cisco NCS 4202. To configure the chassis using the management Ethernet port, you must have the chassis's IP address.

## Accessing the CLI Using the Console

To access the command line interface using the console, follow these steps:

### Procedure

**Step 1** When your system is booting, type No at the prompt.

**Example:**

```
--- System Configuration Dialog ---
Would you like to enter the initial configuration dialog? [yes/no]: no
```

**Step 2** Press Return to enter the user EXEC mode.

The following prompt is displayed:

**Example:**

```
chassis>
```

**Step 3** From the user EXEC mode, enter the enable command, as shown in the following example:

**Example:**

```
chassis> enable
```

**Step 4** At the password prompt, enter your system password, as shown in the following example. If an enable password has not been set on your system, you can skip this step.

**Example:**

```
Password: enablepass
```

When your password is accepted, the privileged EXEC mode prompt is displayed:

**Example:**

```
chassis#
```

You now have access to the CLI in the privileged EXEC mode. You can enter the necessary commands to complete the required tasks.

**Step 5** To exit the console session, enter the quit command, as shown in the following example:

**Example:**

```
chassis# quit
```

# Configuring Global Parameters

When you first start the setup program, configure the global parameters. These parameters are used for controlling system-wide settings. Perform the following steps to enter the global parameters:

**Procedure**

**Step 1** Connect a console terminal to the console port, and then boot the chassis. For more information on connecting a console terminal, see Connecting Console Cables section.

**Step 2** The first sections of the configuration script appear only at an initial system startup. On subsequent uses of the setup facility, the script begins with a System Configuration Dialog as shown below: When you are prompted about whether you want to enter the initial configuration dialog, enter yes.

**Example:**

```
Would you like to enter the initial configuration dialog? [yes/no] yes
At any point you may enter a question mark '?' for help.
Use ctrl-c to abort configuration dialog at any prompt.
Default settings are in square brackets '[]'.
Basic management setup configures only enough connectivity for management of the system,
extended setup will ask you to configure each interface on the system.
```

Basic management setup configures enough connectivity for managing the system; extended setup will ask you to configure each interface on the system.

# Checking the Running Configuration Settings

To check the value of the settings you have entered, enter the show running-config command at the chassis# prompt:

```
chassis# show running-config
```

To review the changes you have made to the configuration use the **show startup-config** command in the user EXEC mode to see the changes and copy run-start stored in the NVRAM.

## Saving the Running Configuration to NVRAM

To store the configuration or changes to your startup configuration in NVRAM, enter the copy running-config startup-config command at the prompt:

```
chassis# copy running-config startup-config
```

Using this command saves the configuration settings that you created in the chassis using the configuration mode and the setup facility. If you fail to do this, your configuration will be lost, and will not be available when you reload the chassis next.

# Safely Powering Off the chassis

This section explains how to shut down the chassis. We recommend that before turning off all power to the chassis, you issue the **reload** command. This ensures that the operating system cleans up all the file systems. After the reload operation is complete, the chassis can be powered off safely.

To power off the chassis safely:

### Procedure

**Step 1** Slip on the ESD-preventive wrist strap included in the accessory kit.

**Step 2** Enter the **reload** command.

**Step 3** Confirm the reload command.

**Example:**

```
Rmcp-6ru-1#reload
Proceed with reload? [confirm]
Aug 17 00:06:47.051 R0/0: %PMAN-5-EXITACTION: Process manager is exiting: prs exit with
reload chassis code
```

**Step 4** After confirming the reload command, wait until the system bootstrap message is displayed before powering off the system:

**Example:**

```
System Bootstrap, Version 15.4(3)S1, RELEASE SOFTWARE (fc1)
Technical Support: http://www.cisco.com/techsupport
Copyright (c) 2012 by cisco Systems, Inc.
Current image running: Boot ROM0
Last reset cause: RSP-Board
UEA platform with 2097152 Kbytes of main memory
```

**Step 5** Remove power cables, if any, from the chassis:

- For power supplies with a circuit breaker switch, position the switch to the Off (O) position.
- For power supplies with a standby switch, place the standby switch in the Standby position.

After powering off the chassis, wait for a minimum of 30 seconds before powering it on again.

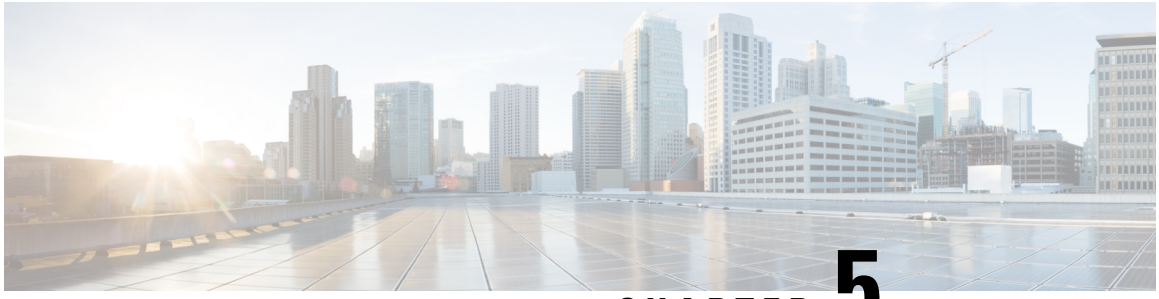

CHAPTER 5

# Troubleshooting

This chapter provides information about troubleshooting issues, if any, on the Cisco NCS 4200 Series:


- Pinouts, on page 115
- LED Summary, on page 118


# Pinouts

The following sections describe the pinouts for the Cisco NCS 4200 Series:

## GPS Port Pinouts

Table below summarizes the GPS port pinouts.

***Table 16: GPS Port Pinouts***

| | **10Mhz (input and output)** | **1PPS (input and output)** |
|---|---|---|
| Waveform | Input—Sine wave<br>Output—Square wave | Input—Pulse<br>Output—Pulse |
| Amplitude | Input—1.7 volt p-p (+8 to +10 dBm)<br>Output—2.4 volts TTL compatible | Input—2.4 volts TTL compatible<br>Output—2.4 volts TTL compatible |
| Impedance | 50 ohms | 50 ohms |
| Pulse Width | 50 percent duty cycle | 26 microseconds |
| Rise Time | Input—AC coupled<br>Output—5 nanoseconds | 40 nanoseconds |

## Time-of-Day Port Pinouts

Table below summarizes the ToD/1-PPS port pinouts.

*Table 17: RJ-45 1PPS/ToD Port Pinouts*

| Pin | Signal Name | Direction | Description |
|---|---|---|---|
| 1 | V.11 Loopback | Output or Input | V.11 Loopback interface pins (Optional) |
| 2 | V.11 Loopback | Output or Input | V.11 Loopback interface pins (Optional) |
| 3 | 1PPS_N | Output or Input | 1PPS RS422 signal |
| 4 | GND | — | — |
| 5 | GND | — | — |
| 6 | 1PPS_P | Input | 1PPS RS422 signal |
| 7 | TOD_N | Output or Input | Time-of-Day character |
| 8 | TOD_P | Output or Input | Time-of-Day character |

# Alarm Port Pinouts

Table below summarizes the external alarm input pinouts.

*Table 18: External Alarm Input Pinouts*

| Pin | Signal Name | Description |
|---|---|---|
| 1 | ALARM0_IN | Alarm input 0 |
| 2 | ALARM1_IN | Alarm input 1 |
| 3 | — | No connect |
| 4 | ALARM2_IN | Alarm input 2 |
| 5 | ALARM3_IN | Alarm input 3 |
| 6 | — | No connect |
| 7 | — | No connect |
| 8 | COMMON | Alarm common |

# Management GigabitEthernet Port Pinouts

Table below summarizes the Management GigabitEthernet port pinouts.

*Table 19: Management Port Pinout*

| Pin | Signal Name |
|---|---|
| 1 | TRP0+ |

| Pin | Signal Name |
|---|---|
| 2 | TRP0- |
| 3 | TRP1+ |
| 4 | TRP2+ |
| 5 | TRP2- |
| 6 | TRP1- |
| 7 | TRP3+ |
| 8 | TRP3- |

# USB Console Port Pinouts

Table below summarizes the USB console port pinouts.

***Table 20: Single USB Console Port Pinouts***

| Pin | Signal Name | Description |
|---|---|---|
| 1 | Vcc | +5VDC |
| 2 | D- | Data - |
| 3 | D+ | Data + |
| 4 | Gnd | Ground |

**Note** The USB console port +5VDC is input, and operates as an USB peripheral device.

# USB Flash or MEM Port Pinouts

Table below summarizes the USB flash or MEM port pinouts.

***Table 21: Single USB Flash or MEM Port Pinouts***

| Pin | Signal Name | Description |
|---|---|---|
| 1 | Vcc | +5VDC |
| 2 | D- | Data - |
| 3 | D+ | Data + |
| 4 | Gnd | Ground |

**Note** USB TYPE-A receptacle is used.

**Note** The USB flash or MEM port +5VDC is output. This chassis provides power for USB flash or MEM port. This port operates as a USB host.

## Optical Fiber Specifications

The specification for optical fiber transmission defines two types of fiber: single mode and multimode. Within the single-mode category, three transmission types are defined: short reach, intermediate reach, and long reach. Within the multimode category, only short reach is available. For information about optical SFP modules, see the documentation for the SFP module at:

http://www.cisco.com/en/US/partner/products/hw/modules/ps5455/prod_installation_guides_list.html .

## Alarm Conditions

Table below summarizes the meaning of the alarm conditions on the Cisco NCS 4200 Series.

***Table 22: Alarm Condition Summary***

| Alarm Type | Alarm Meaning |
|---|---|
| Critical | Port in down state.<br>Environmental sensor threshold exceeded critical level (voltage, temperature) |
| Major | Environmental sensor threshold exceeded major level (voltage, temperature) |
| Info | Port administratively shut down. |

# LED Summary

The following sections describe the meanings of the LEDs.

## Power Supply LEDs

Table below summarizes the power supply LEDs for both the AC and DC power supplies.

***Table 23: PSU LED Indication***

| Power LED | FAIL LED | Power Supply Condition |
|---|---|---|
| Green | Off | Power Supply ON; valid input/output |

| Power LED | FAIL LED | Power Supply Condition |
|---|---|---|
| Yellow 1Hz blinking | Red 1Hz blinking | PSU Warning due to OCP, OTP, UV, OV, OP, abnormal fan operation<br>PSU continues to operate |
| Off | On | PSU failure due to OCP, OTP, UV, OV, OP, abnormal fan operation. No valid output. |
| Green 1Hz blinking | Off | Valid power present, shutdown by system. |
| Yellow | Off | Input voltage low |
| Off | Off | No valid power input. |

# Fan Tray LEDs

Table below summarizes the Fan Tray LEDs.

***Table 24: Fan Tray LEDs***

| Color/State | Description |
|---|---|
| Off | System is not powered on |
| Green | All the fans are working normally |
| Red | Single or multiple fan failures and critical error |

APPENDIX A

# Site Log

Use the Site Log to provide a record of actions related to installing and maintaining the chassis. Keep it in an accessible place near the chassis so that those who perform tasks have access to it. Use the Installation Checklist (see the "Site Planning" section) to verify the steps in the installation and maintenance of your chassis. Site Log entries can include the following:

- Installation progress—Make a copy of the Cisco NCS 4202 Installation Checklist, and insert it into the Site Log. Make entries as you complete each task.
- Upgrade, removal, and maintenance procedures—Use the Site Log as a record of ongoing chassis maintenance and expansion history. Each time a task is performed on the Cisco NCS 4202, update the Site Log to reflect the following:
    - Removal or replacement of interface modules
    - Configuration changes
    - Maintenance schedules and requirements
    - Maintenance procedures performed
    - Intermittent problems
    - Comments and notes

Table below shows a sample site log. Make copies of the sample, or design your own site log to meet the requirements of your site and equipment.

***Table 25: Site Log***

| Date | Description of Action Performed or Symptom Observed | Initials |
|---|---|---|
| | | |