Cisco Integrated 4G Low-profile Outdoor Saucer Antenna (ANT-4G-SR-OUT-TNC)

This chapter contains the following:

- Overview, on page 1
- Technical Specifications, on page 1
- Radiation Patterns, on page 3
- General Safety Precautions, on page 5
- Guidelines to Achieving Optimal RF and Antenna Performance, on page 6
- Antenna Installation, on page 9
- Communications, Services, and Additional Information, on page 11

Overview

This section describes the Cisco Integrated 4G Low-profile Outdoor Saucer Antenna. It supports frequencies of 698 to 960 MHz, 1575 MHz, and 1710 to 2700 MHz for the GSM, DCS, UMTS, and LTE/WiMAX frequency bands. In addition, this document provides the antenna specifications and mounting instructions of the antenna.

Caution Read all of the information before installing or replacing antennas

This chapter covers the following topics:

Technical Specifications

The Integrated 4G Low-profile Outdoor Saucer Antenna features the following:

- Applicable for both 3G and 4G solutions
- Domestic LTE 700 band and Global LTE 2600 band
- Domestic Cellular and Global GSM
- Weatherproof UV stable radome

- Performance optimized
- Excellent flame rating

Figure 1: Low-Profile Saucer Antenna

RF Specifications

Specification	Description
Frequency range	698 to 960 MHz 1448 to 1511 MHz 1710 to 2700 MHz
Peak gain w/15 foot cable	0.8 dBi (698 to 960 MHz) 0.5 dBI (1448 to 1511 MHz) 0.2 dBi (1710 to 2700 MHz)
Average efficiency w/15 foot cable	60 percent (698 to 960 MHz) 50 percent (1448 to 1511 MHz 40 percent (1710 to 2700 MHz)

Specification	Description
Polarization	Linear, vertical
Nominal impedance	50 ohms
VSWR (maximum)	2.0:1 (698 to 960 MHz) 1.9:1 (1448 to 1511 MHz) 2.0:1 (1710 to 2700 MHz)
H-plane (3 dB beamwidth)	Omnidirectional

Mechanical Specifications

Specification	Description
H-plane 3 dB beamwidth	Omnidirectional
Polarization	Linear, vertical
Nominal impedance	50 ohm
Power	3 watts
Cable	15 foot LMR 195
RF connector	TNC(m)
Mount Style	Stud mount, 5/8-18-NF mounting stud, mount on the roof or suitable flat surface
Radome	PC/ABS, UV stable, black
Material substance compliance	RoHS compliant
Operational temperature	-22 to 158 degrees F (-40 to 70 degrees C)
Storage temperature	-40 to 185 degrees F (-40 to 85 degrees C)
Environment	Outdoor, IP67, IK-08
Dimensions (ht x OD)	3.4 inches x 7.9 inches (87 mm x 200 mm)
Weight	0.75kg

Radiation Patterns

The following graphics show the radiation patterns of the saucer antenna.

Figure 2: Low-profile Saucer Antenna Radiation Patterns

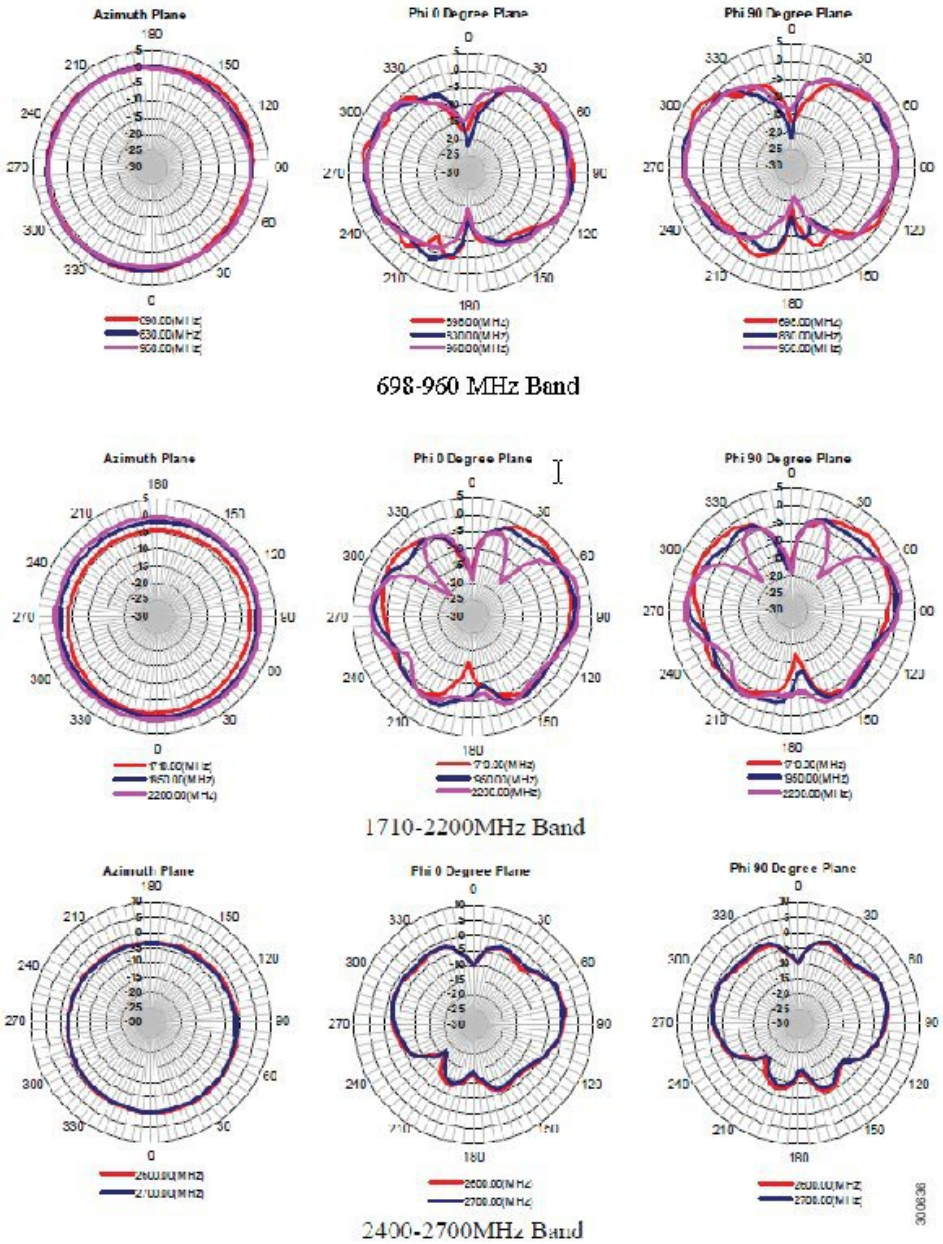

General Safety Precautions

Warning

Statement 1071—Warning Definition

IMPORTANT SAFETY INSTRUCTIONS

Before you work on any equipment, be aware of the hazards involved with electrical circuitry and be familiar with standard practices for preventing accidents. Read the installation instructions before using, installing, or connecting the system to the power source. Use the statement number at the beginning of each warning statement to locate its translation in the translated safety warnings for this device.

SAVE THESE INSTRUCTIONS

Note

For your safety, and to help you achieve a good installation, please read and follow these safety precautions.

Mast Mounted or Building Mounted Installations

The following instructions are common to most mast mounted or building mounted installations. For specific installation instructions for each antenna, see the antenna data-sheet and the router hardware installation guide.

- Find someone to help you—installing an antenna is often a two-person job.
- Select your installation site with safety, as well as performance, in mind. Remember that electric power lines and phone lines look alike. For your safety, assume that any overhead line can kill you.
- Contact your electric power company. Tell them your plans and ask them to come look at your proposed installation.
- Do not use a metal ladder.
- Do not work on a wet or windy day.
- Do dress properly—wear shoes with rubber soles and heels, rubber gloves, and a long-sleeved shirt or jacket.
- If the assembly starts to drop, move away from it and let it fall. Because the antenna, mast, cable, and metal guy wires are all excellent conductors of electrical current, even the slightest touch of any of these parts to a power line completes an electrical path through the antenna and the installer.
- If any part of the antenna system should come in contact with a power line, do not touch it or try to remove it yourself. Call your local power company to have it removed safely.
- If an accident should occur with the power lines, call for qualified emergency help immediately.
- Assemble your new antenna on the ground or a level surface at the installation site.
- Connect its coaxial cable while you are on the ground and attach the antenna to the mast.

- Ensure that the mast does not fall as you raise or remove it. Use a durable non-conductive rope secured at each two foot level as the mast is raised. Have an assistant tend the rope, ready to pull the mast clear of any hazards (such as power lines) should it begin to fall.
- Use the mounting bracket provided with the antenna.
- If the installation will use guy wires:
  - Install guy anchor bolts.
  - Estimate the length of guy wire and cut it before raising the mast.
  - Attach guy wires to a mast using guy rings.
  - In the case of a guyed (tall, thin mast) installation, you must have at least one assistant to hold the mast upright while the guy wires are attached and tightened to the anchor bolts.
- Attach a “DANGER” label at eye level on the mast.
- Install ground rods to remove any static electricity buildup and connect a ground wire to the mast and ground rod. Use ground rods designed for that purpose, not a spare piece of pipe.

Unused Antenna Ports

Port plugs must be installed in any unused antenna ports.

The weatherproof caps on the connectors protect the router interior from environmental elements including water, heat, cold, and dust. They are installed on unused ports before the router is shipped.

When you install a new antenna in a port with an N-connector:

- Chassis-mounted antennas—Remove the weather proof cap before installing a chassis-mounted antenna.
- External antennas—Remove weatherproof cap, then connect the supported Cisco cable to the connector.

Guidelines to Achieving Optimal RF and Antenna Performance

Antennas are a critical component of a wireless communication system. Selecting a suitable antenna, an optimal antenna location, or antenna site is essential for optimum performance of a wireless links.

This section covers general tips for optimizing RF performance of indoor and outdoor terrestrial radio systems in the 400-7125 MHz frequency range. Examples of terrestrial radio systems include 4G LTE, 5G NR, Wi-Fi, LoRa, LR-WPAN and similar. In this context GPS SPS would not be considered a terrestrial system as the signal is received from space, not from another terrestrial site.

Because the antenna transmits and receives radio signals over the air, overall RF performance of the link is susceptible to RF obstructions and common sources of RF interference that can reduce throughput and range of the system.

Follow these guidelines to optimize performance. When in doubt, consult a qualified RF professional, and check with your solution partner for specific recommendations.

Antenna Model Selection and Performance

Consider the following when planning your installation:

- When selecting the antenna, ensure that it covers the frequency ranges or frequency bands of interest, and that it has good RF parameters such as antenna efficiency, VSWR and suitable radiation pattern for every frequency range that your application will use with this antenna.
- Antenna pattern is important. Omni-directional antennas have lower gain, but allow communicating to devices in all azimuth directions. Directional antennas concentrate the beam in a specific direction, making them ideal for point to point communication.
- When a system has multiple RF ports for receive and / or transmit, as is the case for 4G LTE , 5G NR or Wi-Fi, it is highly recommended to populate all the RF ports with suitable antennas to take advantage of MIMO, rather than rely on a single port or single antenna to save on cost. Please see the MIMO section for a detailed description of MIMO benefits.
- For RF systems that support multiple RF ports and multiple RF standards such as LTE, Wi-Fi, and GPS: consider using a multi-element antenna that integrates multiple antennas under the same radome (cover). Doing so may reduce cost compared to deploying and mounting a discrete single port antenna for every RF port.
- For communication between fixed infrastructure devices, such as mesh nodes or a point-to-point backhaul link, each device should have an antenna with the same polarization. If communicating with mobile devices that might be randomly oriented, consider dual-polarized antennas, such as those with both vertical and horizontal or slant +45° and -45° polarized elements.

Antenna Environmental Specifications

The selected antenna must have suitable mechanical and environmental specifications for the environment where it will be deployed. For example, shock and vibration specifications for transportation, corrosion resistant construction for marine and oil and gas industries, or IP (ingress protection) rating for outdoor deployment. Indoor antennas are typically not suitable for harsh industrial environments. Please check with your system integrator for environmental requirements for your application.

Antenna Accessories and Mounting

Consider the following when planning your installation:

- Carefully consider what type of other RF accessories, besides antenna, such as RF cables, lightning arrestors or RF adapters may be required in your installations. It is best to minimize long RF cable runs due to RF signal losses in the cable. Thinner RF cables have more RF loss , thicker cables are less flexible and more expensive.
- Carefully consider how the antenna will be physically mounted, as this may affect antenna selection. For example, a stud mount mechanical mounting design is a better fit for mounting on top of an electrical cabinet than a mast mount antenna.
- For outdoor deployments, follow installation instructions for the antenna. It is good practice to keep protective covers on the radio's RF ports and any antenna or accessory RF ports until the moment the interfaces are mated. This reduces chances of contamination, trapping water or condensation inside the connector, or accidental damage to RF interfaces.

MIMO Performance and Arrays

MIMO systems deliver benefits of higher SNR, higher reliability and higher throughput compared to single antenna systems. In more technical terms, MIMO delivers array gain, diversity gain and multiplexing gain compared to single antenna.

- Array gain — Improvement in SNR (signal to noise ratio) by coherently combining signals from multiple antennas. For example, increasing SNR through beamforming techniques.
- Diversity gain — Improvement in reliability by mitigating deep fading or strong destructive EM wave interference. For example, in a two-antenna system, if one antenna is experiencing deep fading due to an EM destructive null at its location at a given instant, the other antenna is unlikely to have a null at the same instant, and the combined SNR stays at a reliable level. In contrast, a single antenna would see SNR oscillating between good SNR and very poor SNR and reliability would degrade.
- Multiplexing gain — Increase in system capacity or throughput by sending independent data over multiple spatial streams simultaneously. The number of streams cannot be more than the number of antennas. For example, to support three spatial streams, a minimum of three antennas is required. Often there may be additional antennas for diversity or redundancy, such as in the case of 4x4:3, or 4x4 MIMO with 3 spatial streams.

If deploying multiple single-element antennas for a MIMO system in an array, ensure sufficient spacing between the antennas. Omnidirectional elements should generally be at least one wavelength apart at the lowest operating frequency.

Consider the following:

- For Wi-Fi systems operating in the 2.4, 5, and/or 6 GHz bands, space elements at least 5 inches (12.5 cm) apart.
- For 4G LTE and 5G systems with the lowest operating frequency of 617 MHz , space elements at least 20 inches (50 cm) apart.
- Note that spacing between elements inside multi-element MIMO antennas is often less than one wavelength. However multi-element antennas are engineered with MIMO performance in mind, by providing antenna diversity through pattern, polarization, and isolation between MIMO elements.

Antenna siting and location

Consider the following when planning your installation:

- Plan antenna location ahead of time. Ideal location for an antenna is in LOS (line of sight) of the counterpart that it is trying to communicate with. Under LOS conditions the signals propagate directly between the two communication nodes, without relying on signal bouncing off a wall or other structure to reach the counterpart. This is sometimes not possible to achieve in practice, but it is a useful goal to keep in mind when optimizing antenna location.
- While it is good to keep RF cables short, it is most desirable for an antenna to be in the best location it can be to provide the desired coverage.
- For large deployments involving multiple units communicating with each other across a complex urban or industrial landscape, consider running an RF propagation modeling study to predict approximate simulated coverage maps and determine initial placement of the units. A propagation study may help reduce overall deployment cost by discovering and mitigating issues with RF coverage before the infrastructure is physically installed.
- Keep the antenna away from metal obstructions such as heating and air-conditioning ducts, large ceiling trusses, building superstructures, and major power cabling runs. One exception is if the antenna is designed to be mounted on a ground plane. If mounting on a ground plane, mount the antenna on a flat metal surface away from adjacent obstructions.

- It is strongly recommended not to install antennas directly on the router or access point (AP), unless the router or AP is specifically engineered to directly mount the antennas. Products that are engineered for direct mounting of antennas specifically address each of the below issues.
- Reasons to mount antennas away from the router include:
  - Router location may not be optimal location for antenna to communicate with the counterpart wirelessly, so router and antenna may need to be in different locations.
  - Router may have a clutter of Ethernet cable and power cables around it, which will obstruct antenna signal.
  - A number of routers, such as the IR1835, are modular. They have plug-in RF modules for Wi-Fi , 4G LTE or 5G NR such as WP-WIFI6, P-LTEAP18-GL, P-5GS6-GL. These modules have RF connectors spaced close together, and while it is mechanically possible to install four or five antennas directly attached, this will result in significant degradation to RF performance of antennas due to mutual de-tuning between closely spaced antennas. It is strongly recommended to install antennas away from the chassis in modular cases.
- If installing an antenna indoors, consider that the density and electromagnetic properties of the materials used in the building construction determines the number of walls the signal can pass through and still maintain adequate coverage.
  - Paper and vinyl walls have very little effect on signal penetration.
  - Solid and pre-cast concrete walls limit signal penetration to one or two walls without degrading coverage.
  - Concrete and wood block walls limit signal penetration to three or four walls.
  - A signal can penetrate five or six walls constructed of drywall or wood.
  - A thick metal wall causes signals to reflect off, causing poor penetration.
  - A chain link fence or wire mesh spaced between 1 and 1 1/2 in. (2.5 and 3.8 cm) acts as a harmonic reflector that blocks a 2.4-GHz radio signal.
  - Install the antenna away from microwave ovens and 2-GHz cordless phones. These products can cause signal interference because they operate in the same frequency range as the device your antenna is connected to.

Antenna Installation

The antenna installation includes the following procedures:

Tools and Equipment Required

In addition to the parts included in the antenna kit, you must provide the following tool to install the antenna on the router:

- Phillips screwdriver
- Open-end wrench

- Drill
- Marker or pencil

Installing the Antenna

Follow these instructions to install the antenna:

Note The following example is for a CGR 1120 router with a CGM cellular module.

Procedure

Step 1 Determine the installation location on the wall of the utility cabinet.

Step 2 Create the center hole to accommodate the threaded center rod and the three mounting holes of the saucer antenna. Secure the antenna onto the ceiling with the 3 screws using a Phillips #2 screwdriver.

Step 3 From inside the utility cabinet space, secure the antenna.

Figure 3: Antenna Detail

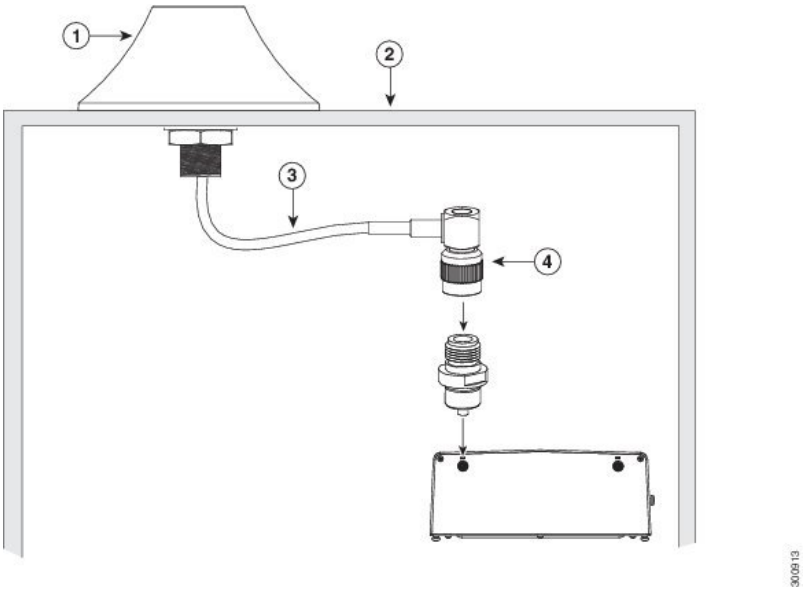

1	Saucer antenna
2	Wall of utility cabinet
3	LMR-195 cable
4	TNC (m) connector

Step 4 Connect the TNC (m) connector end of the antenna cable to the TNC(f)-to-QMA(m) connector adapter (ANT-ADPTR-Q-TNC).

Step 5 Attach the adapter to the QMA (f) connector of the CGR 1120 port.

Communications, Services, and Additional Information

- To receive timely, relevant information from Cisco, sign up at Cisco Profile Manager.
- To get the business impact you're looking for with the technologies that matter, visit Cisco Services.
- To submit a service request, visit Cisco Support.
- To discover and browse secure, validated enterprise-class apps, products, solutions, and services, visit Cisco DevNet.
- To obtain general networking, training, and certification titles, visit Cisco Press.
- To find warranty information for a specific product or product family, access Cisco Warranty Finder.

Cisco Bug Search Tool

Cisco Bug Search Tool (BST) is a web-based tool that acts as a gateway to the Cisco bug tracking system that maintains a comprehensive list of defects and vulnerabilities in Cisco products and software. BST provides you with detailed defect information about your products and software.

Documentation Feedback

To provide feedback about Cisco technical documentation, use the feedback form available in the right pane of every online document.

Cisco Support Community

Cisco Support Community is a forum for you to ask and answer questions, share suggestions, and collaborate with your peers. Join the forum at https://supportforums.cisco.com/index.jspa.